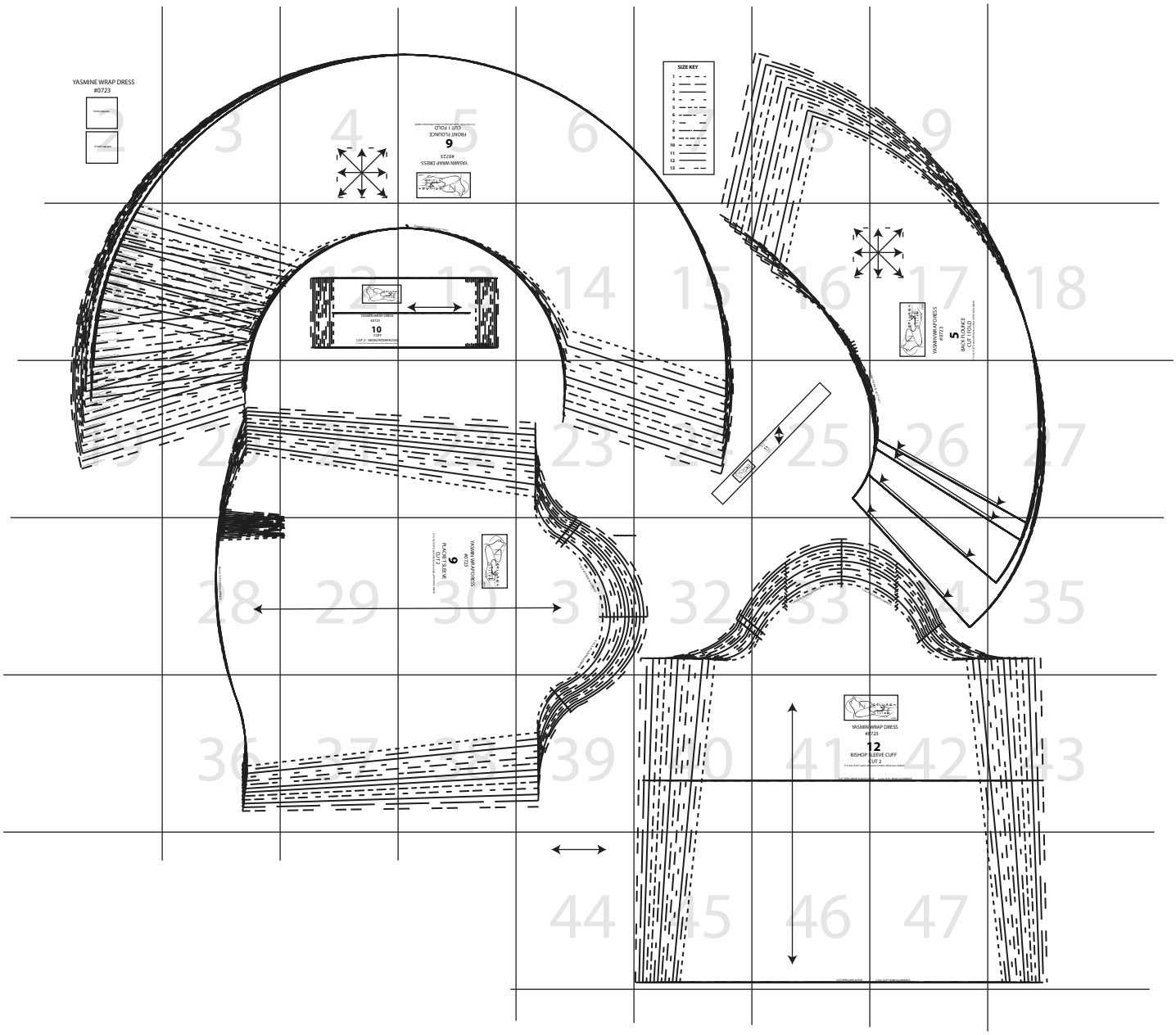

PRINT TILING TEMPLATE GUIDE FOR SIZE SPECIFIC CHOICE
TRIMLESS PRINT AT HOME PATTERN

YASMINE WRAP DRESS
#0723

5cms square

2 inch square

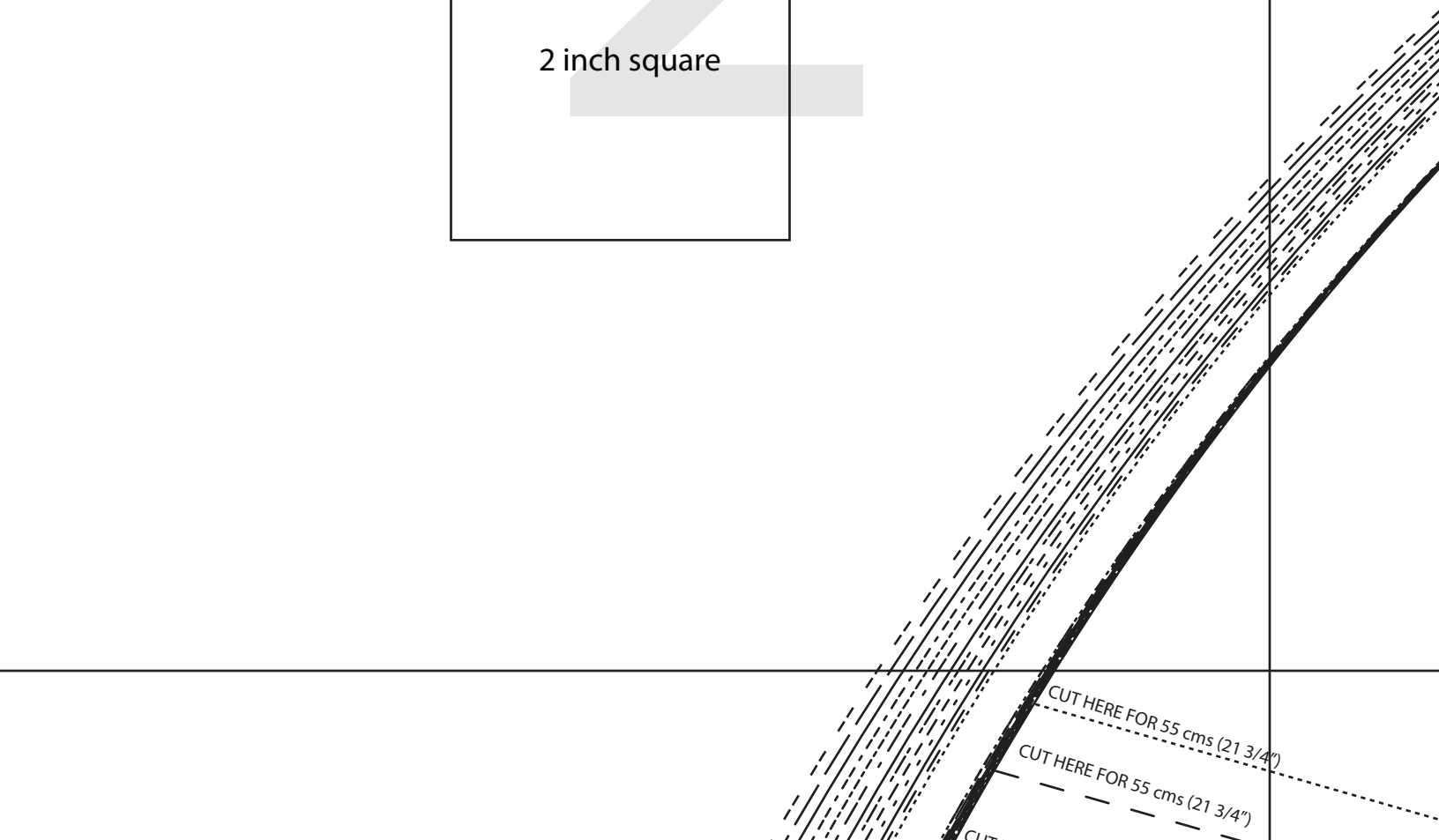

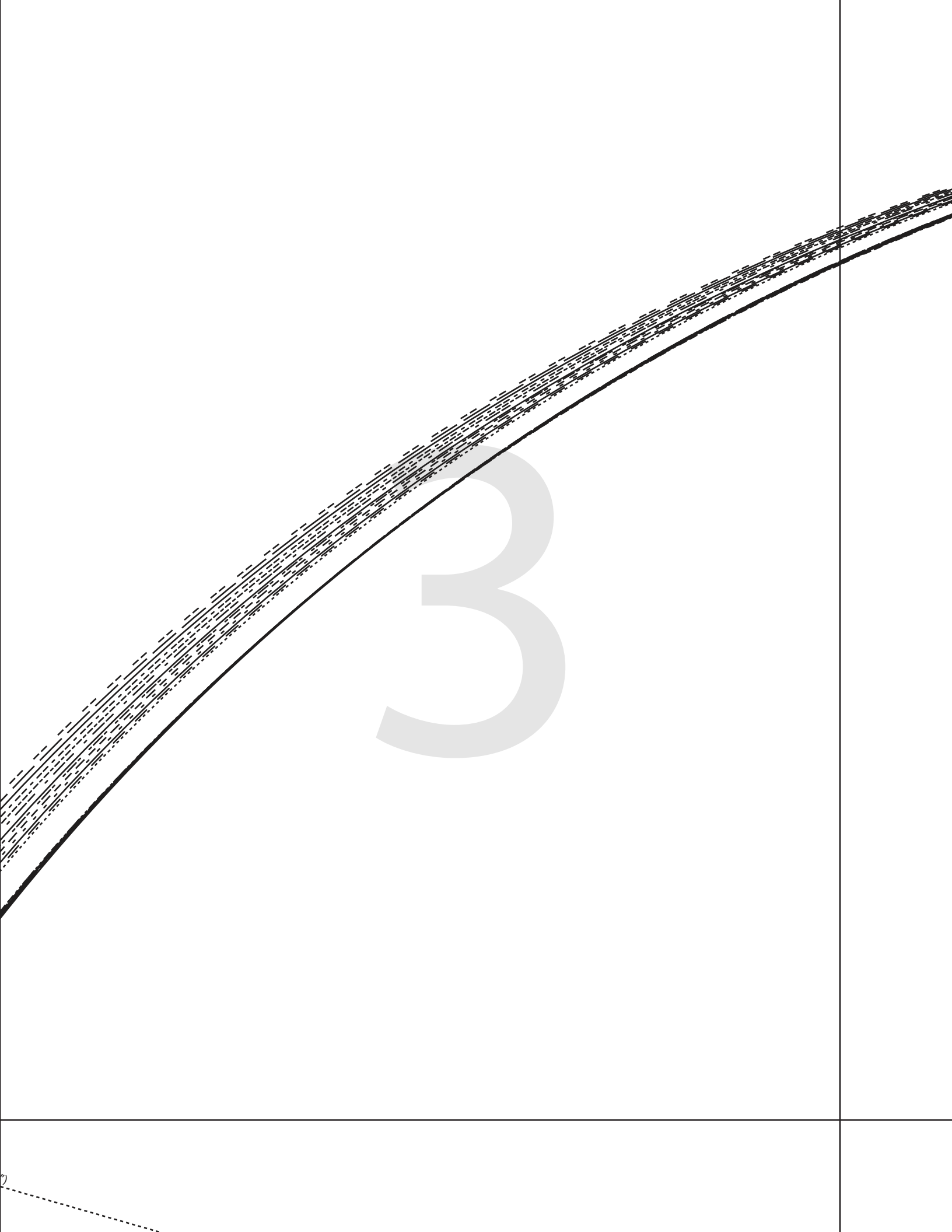

4

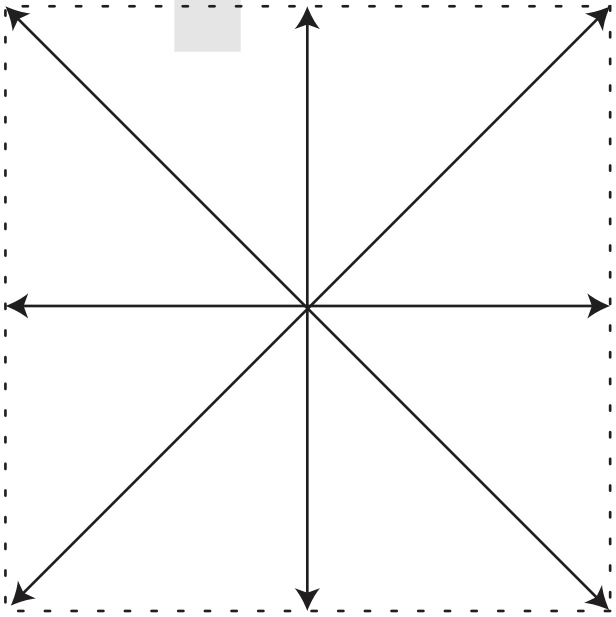

YASMIN WRAP DRESS
#0723

6

FRONT FLOUNCE
CUT 2

(1.5 cms (5/8“) seam allowance unless otherwise stated)

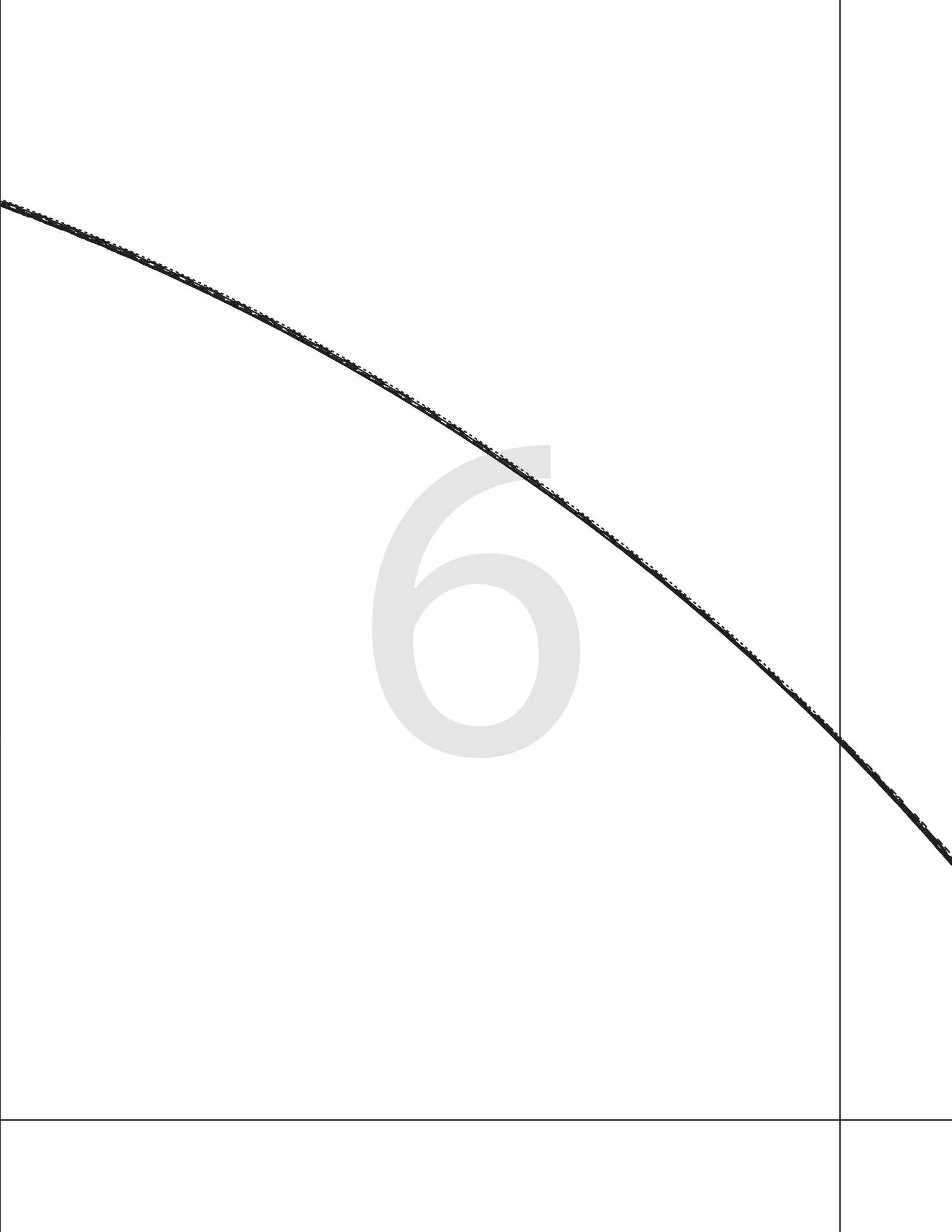

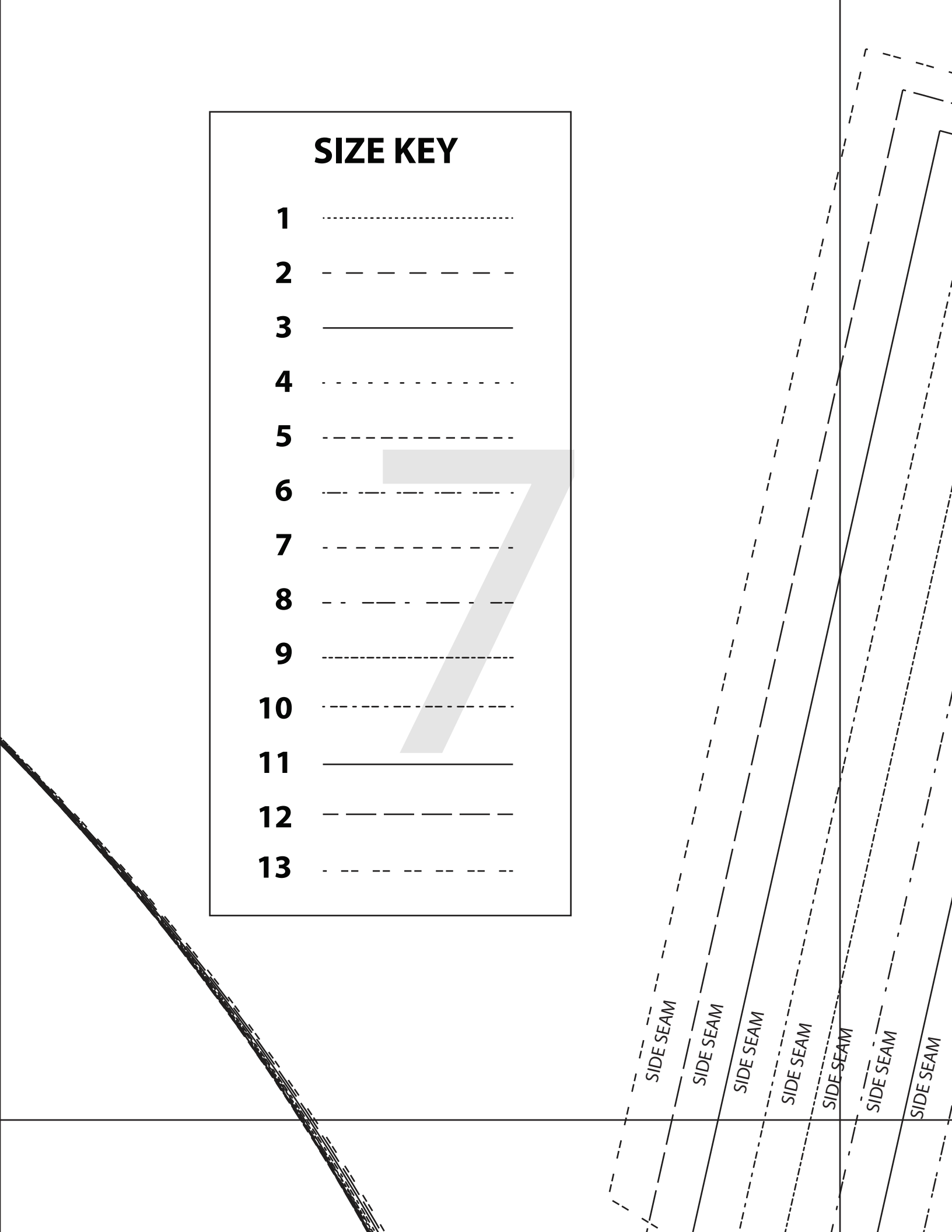
SIZE KEY
1
2
3
4
5
6
7
8
9
10
11
12
13
SIDE SEAM
SIDE SEAM
SIDE SEAM
SIDE SEAM
SIDE SEAM
SIDE SEAM
SIDE SEAM

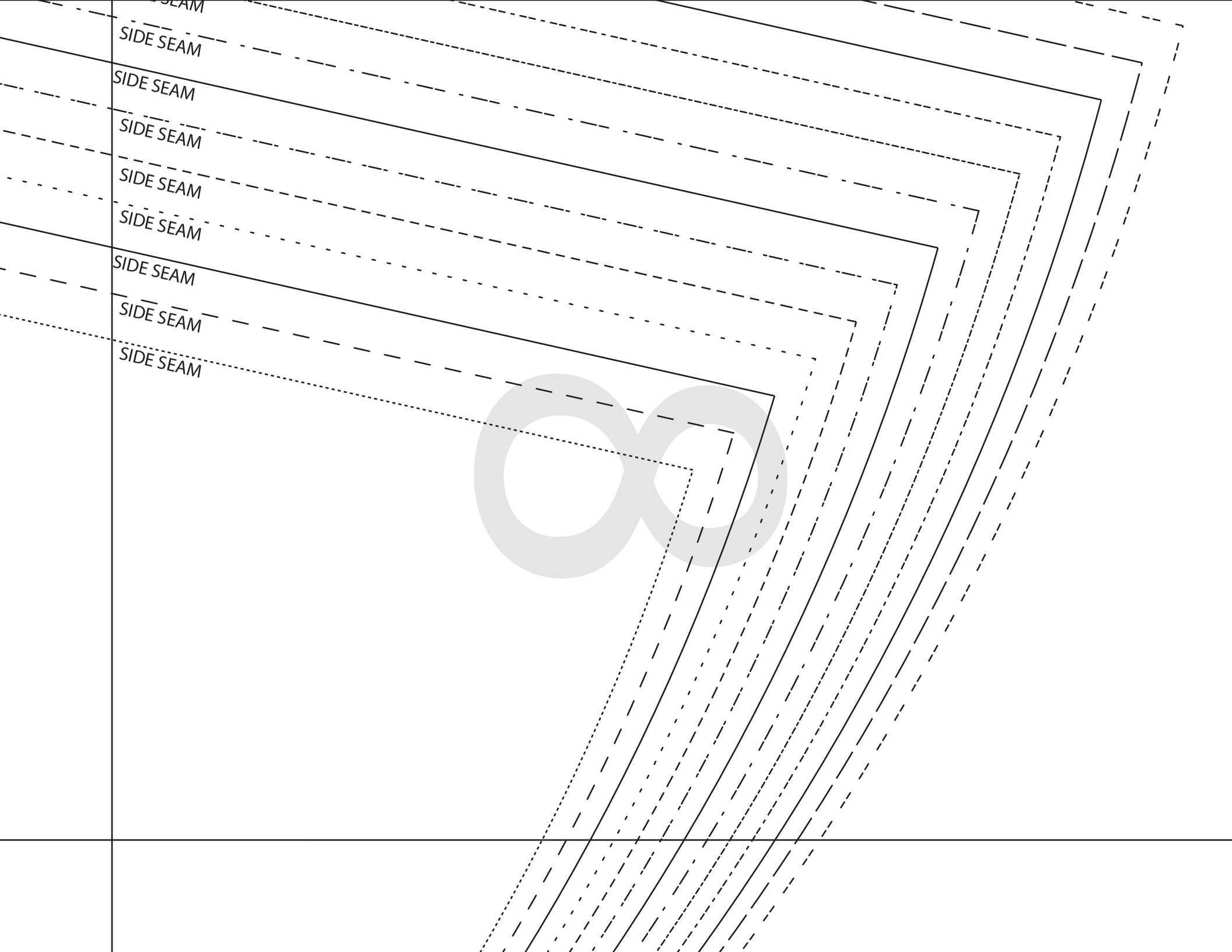
SIDE SEAM
SIDE SEAM
SIDE SEAM
SIDE SEAM
SIDE SEAM
SIDE SEAM
SIDE SEAM
SIDE SEAM

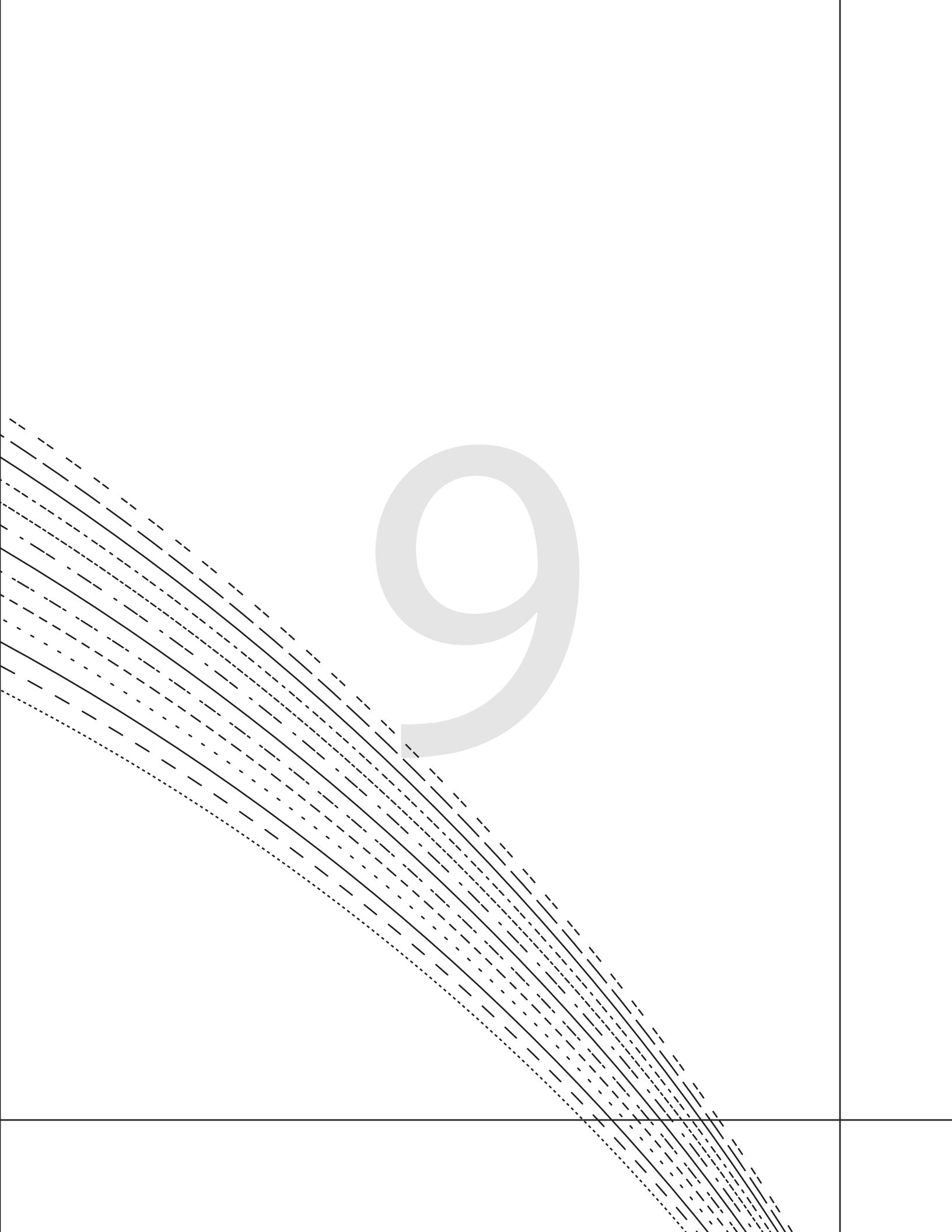

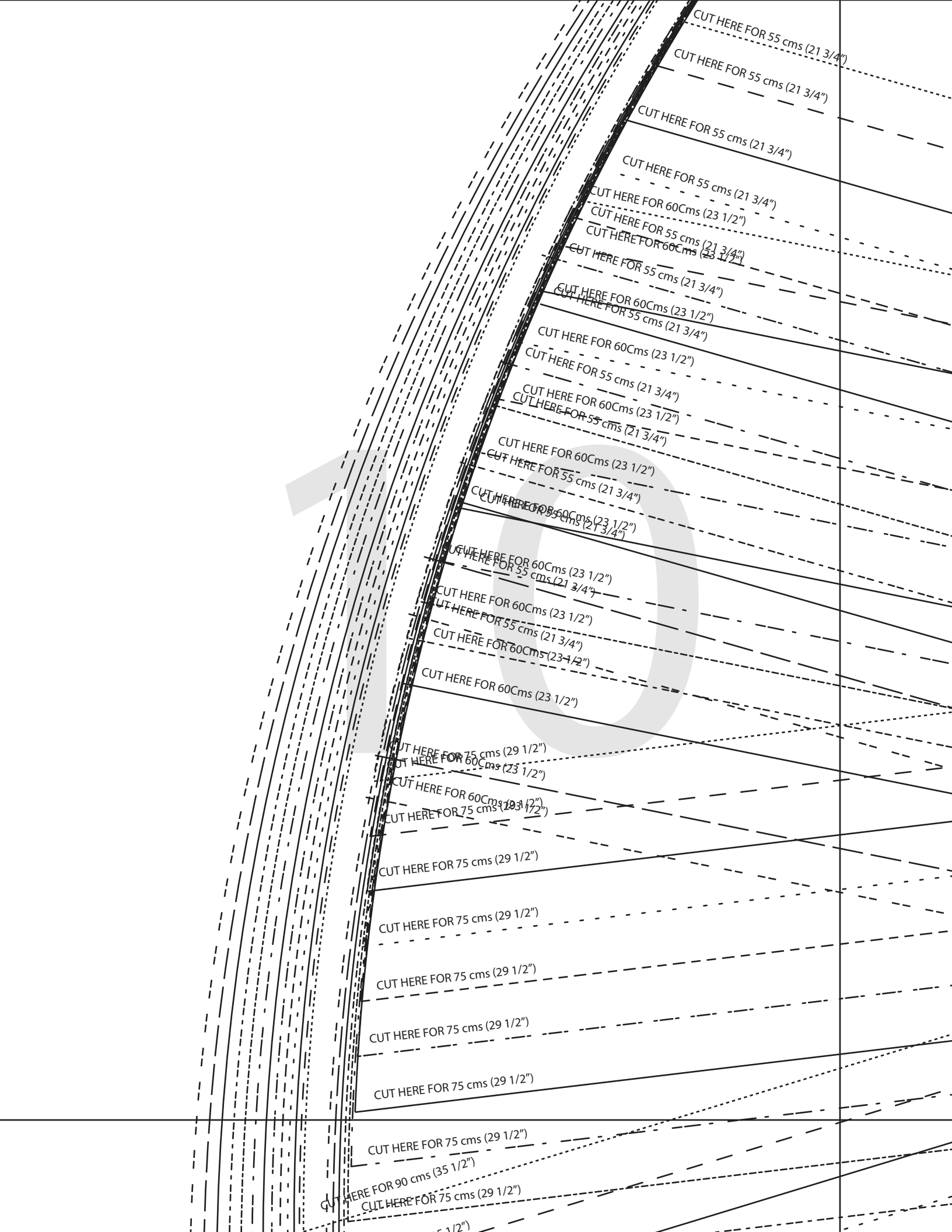
CUT HERE FOR 55 cms (21 3/4")
CUT HERE FOR 55 cms (21 3/4")
CUT HERE FOR 55 cms (21 3/4")
CUT HERE FOR 55 cms (21 3/4")
CUT HERE FOR 60Cms (23 1/2")
CUT HERE FOR 55 cms (21 3/4")
CUT HERE FOR 60Cms (23 1/2")
CUT HERE FOR 55 cms (21 3/4")
CUT HERE FOR 60Cms (23 1/2")
CUT HERE FOR 55 cms (21 3/4")
CUT HERE FOR 60Cms (23 1/2")
CUT HERE FOR 55 cms (21 3/4")
CUT HERE FOR 60Cms (23 1/2")
CUT HERE FOR 55 cms (21 3/4")
CUT HERE FOR 60Cms (23 1/2")
CUT HERE FOR 55 cms (21 3/4")
CUT HERE FOR 60Cms (23 1/2")
CUT HERE FOR 55 cms (21 3/4")
CUT HERE FOR 60Cms (23 1/2")
CUT HERE FOR 75 cms (29 1/2")
CUT HERE FOR 60Cms (23 1/2")
CUT HERE FOR 75 cms (29 1/2")
CUT HERE FOR 75 cms (29 1/2")
CUT HERE FOR 75 cms (29 1/2")
CUT HERE FOR 75 cms (29 1/2")
CUT HERE FOR 75 cms (29 1/2")
CUT HERE FOR 90 cms (35 1/2")
CUT HERE FOR 75 cms (29 1/2")

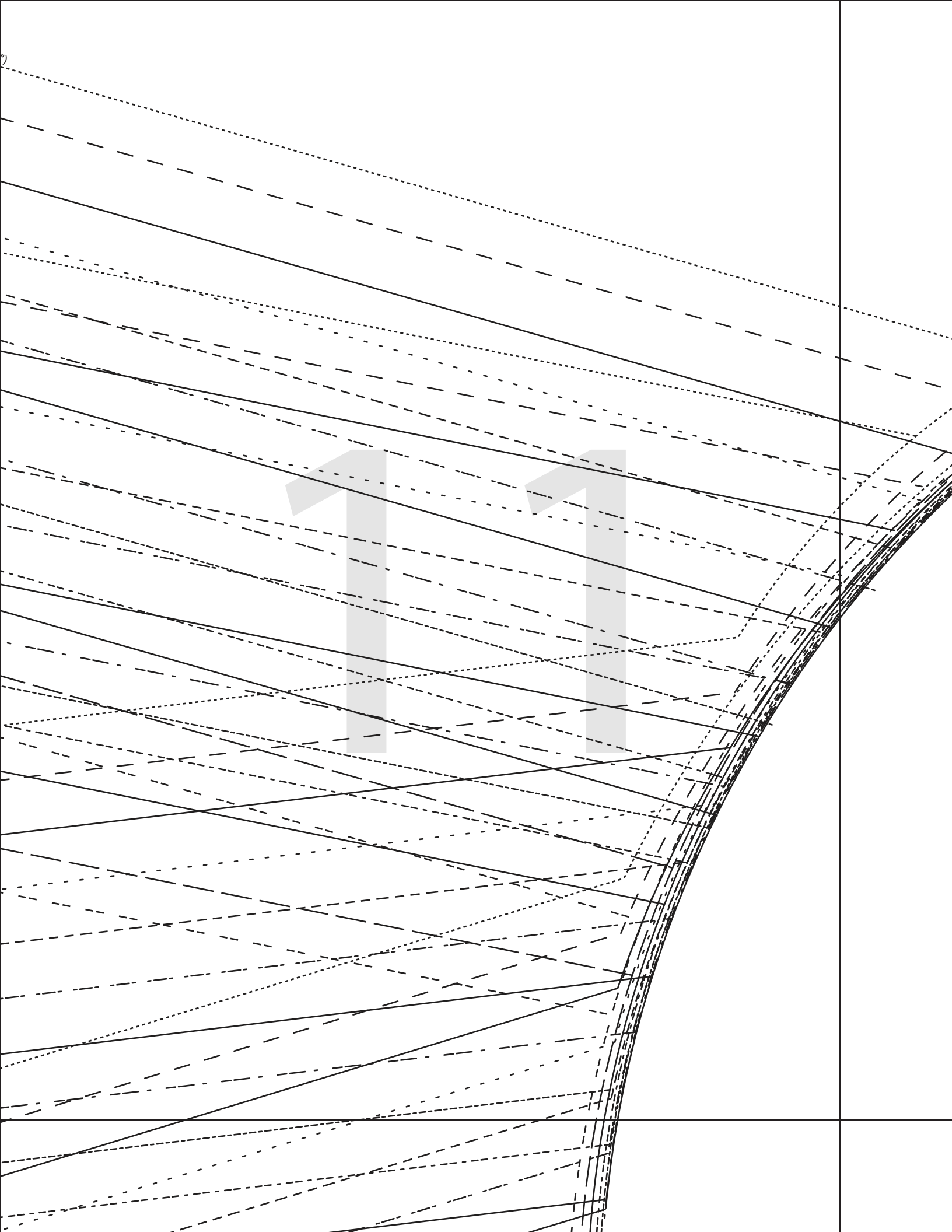

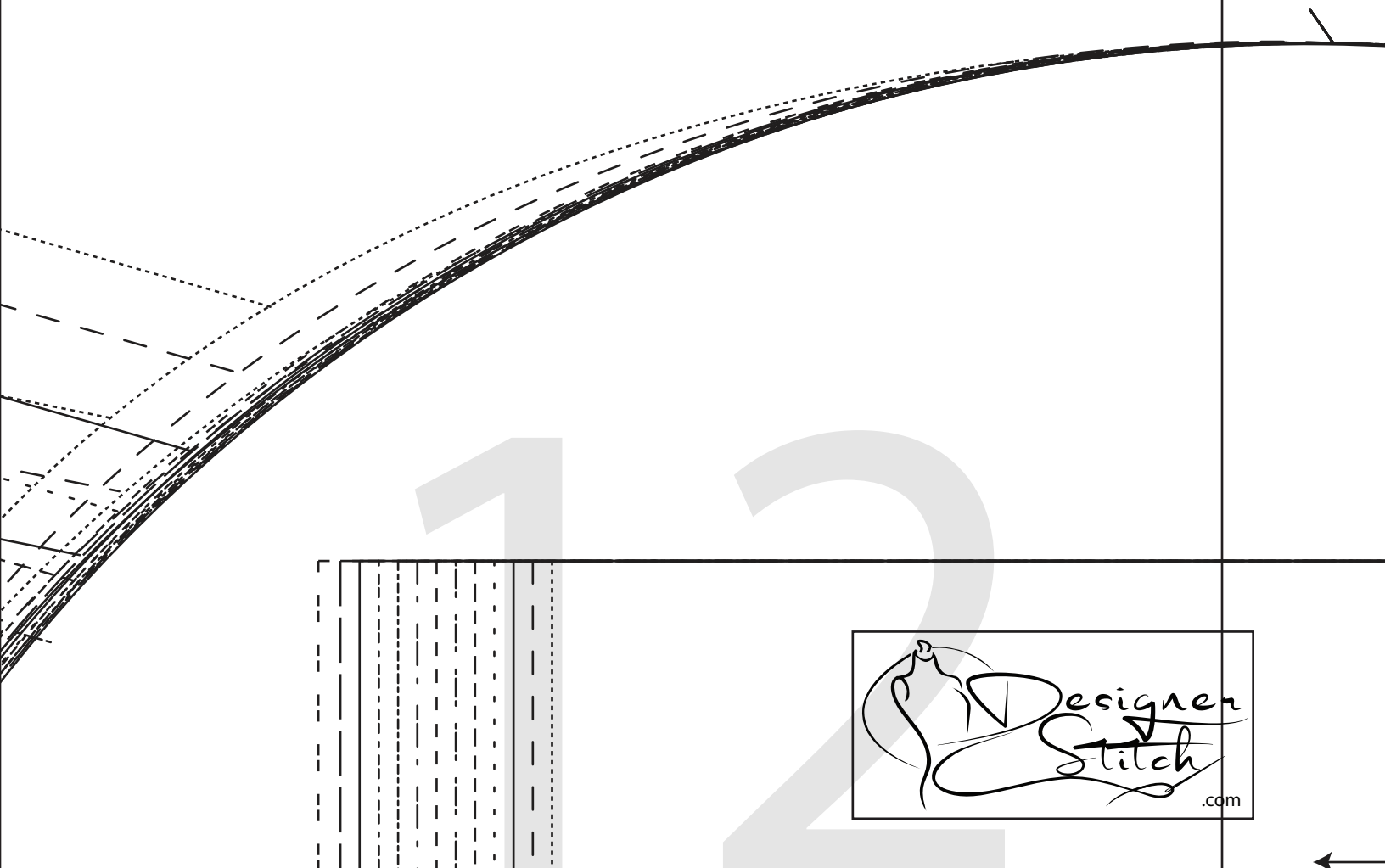

12

YASMIN WRAP DRESS
#0723

10

CUFF

CUT 2 - MAIN/INTERFACING

(1.5 cms (5/8") seam allowance unless otherwise stated)

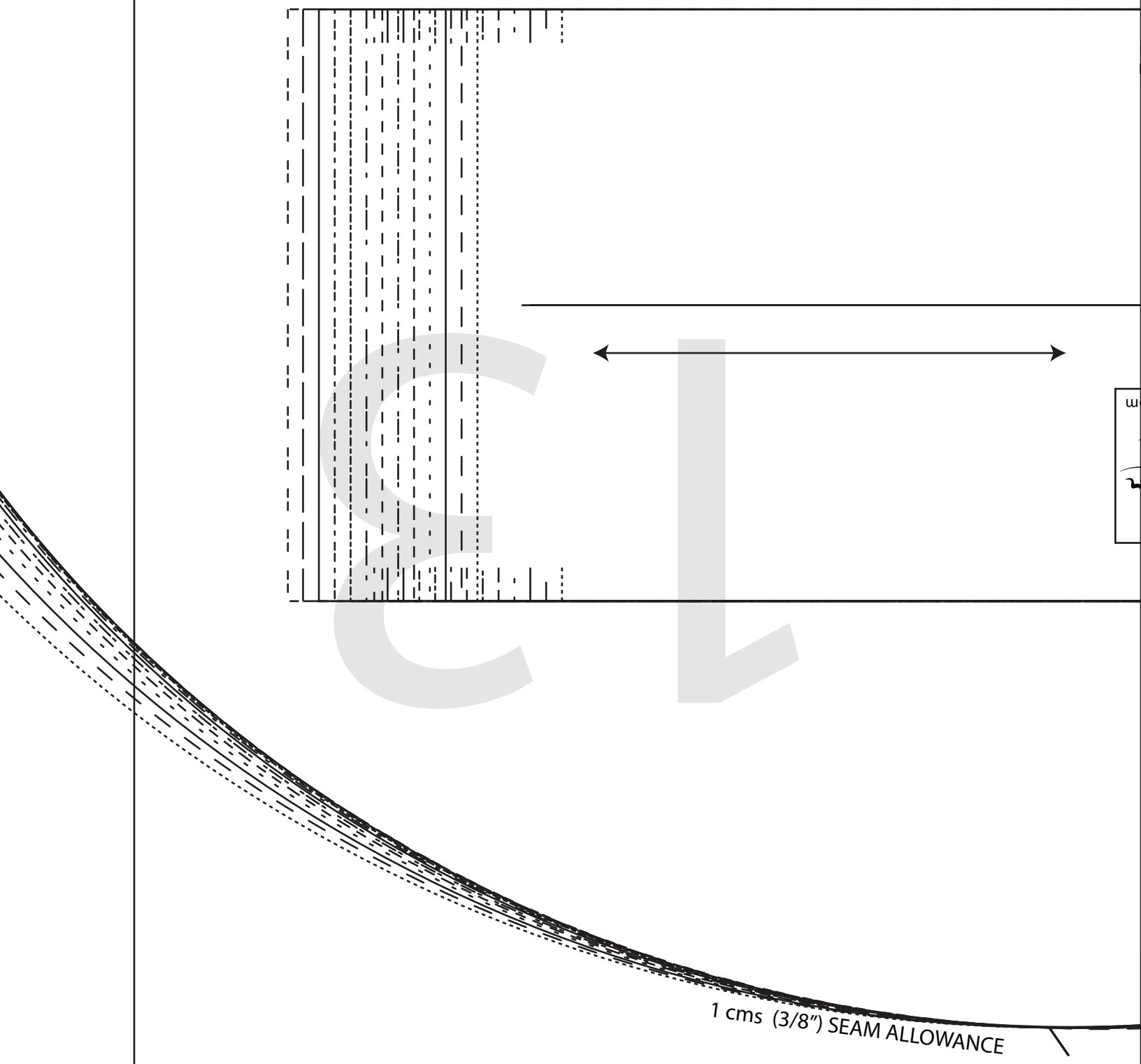
1 cms (3/8") SEAM ALLOWANCE

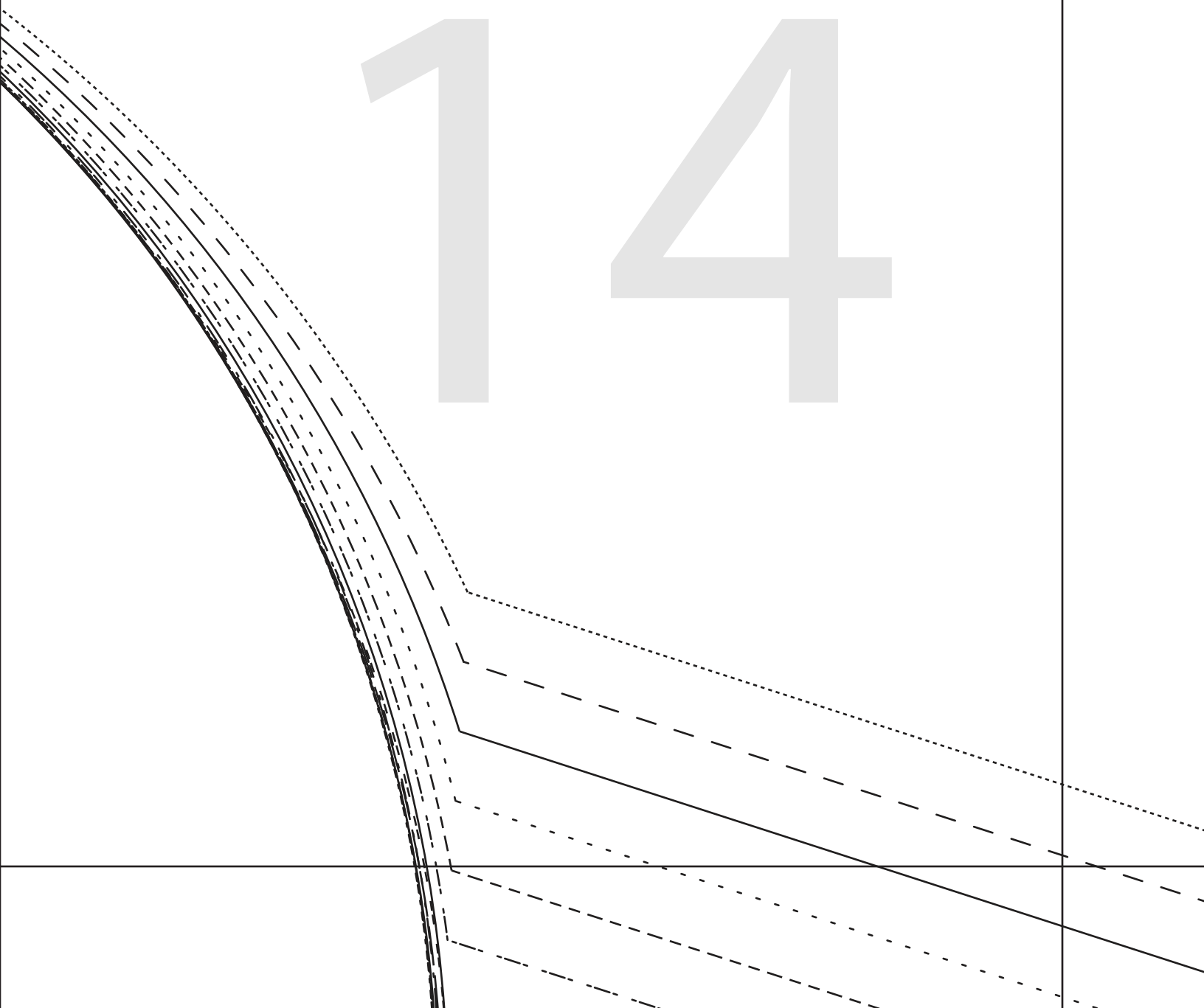

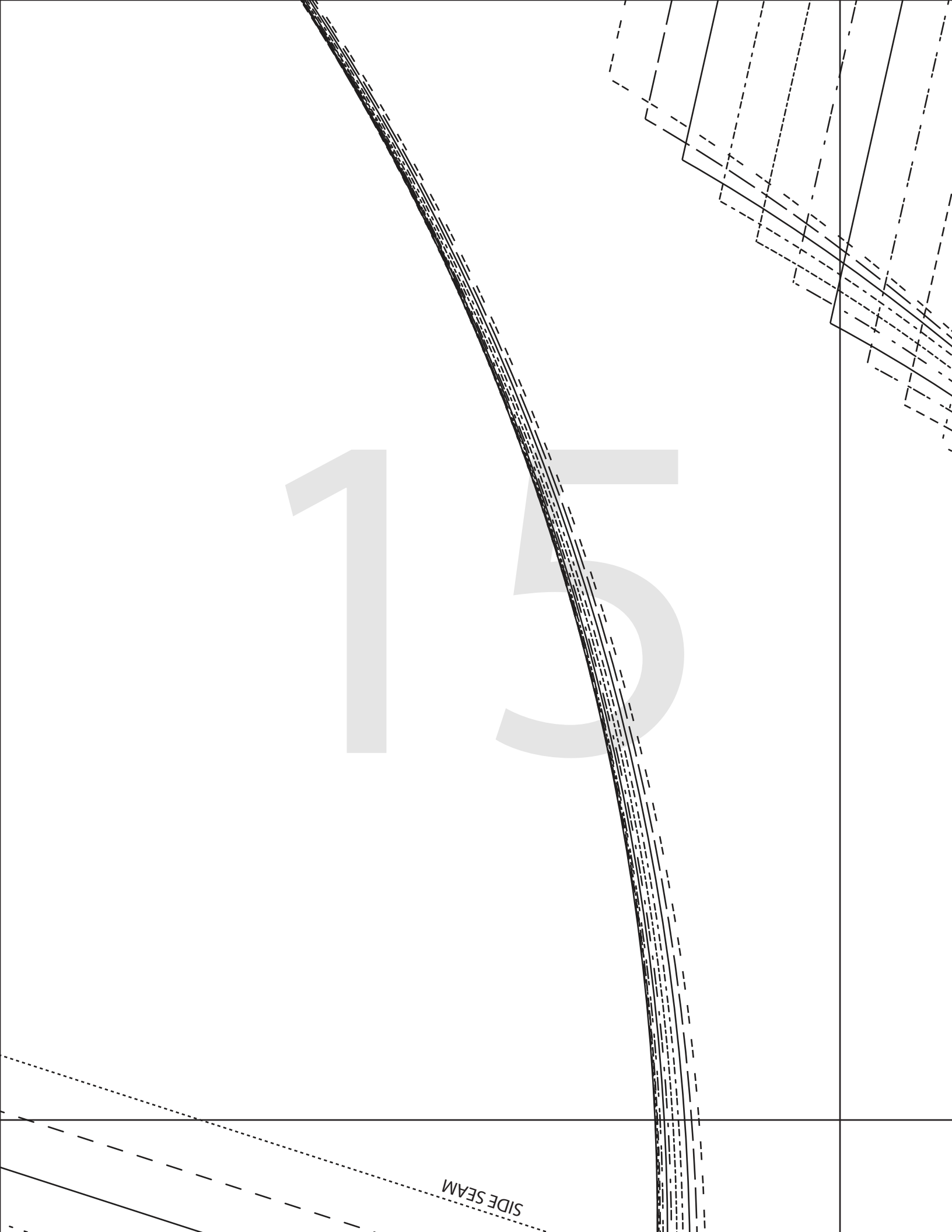
15
SIDE SEAM

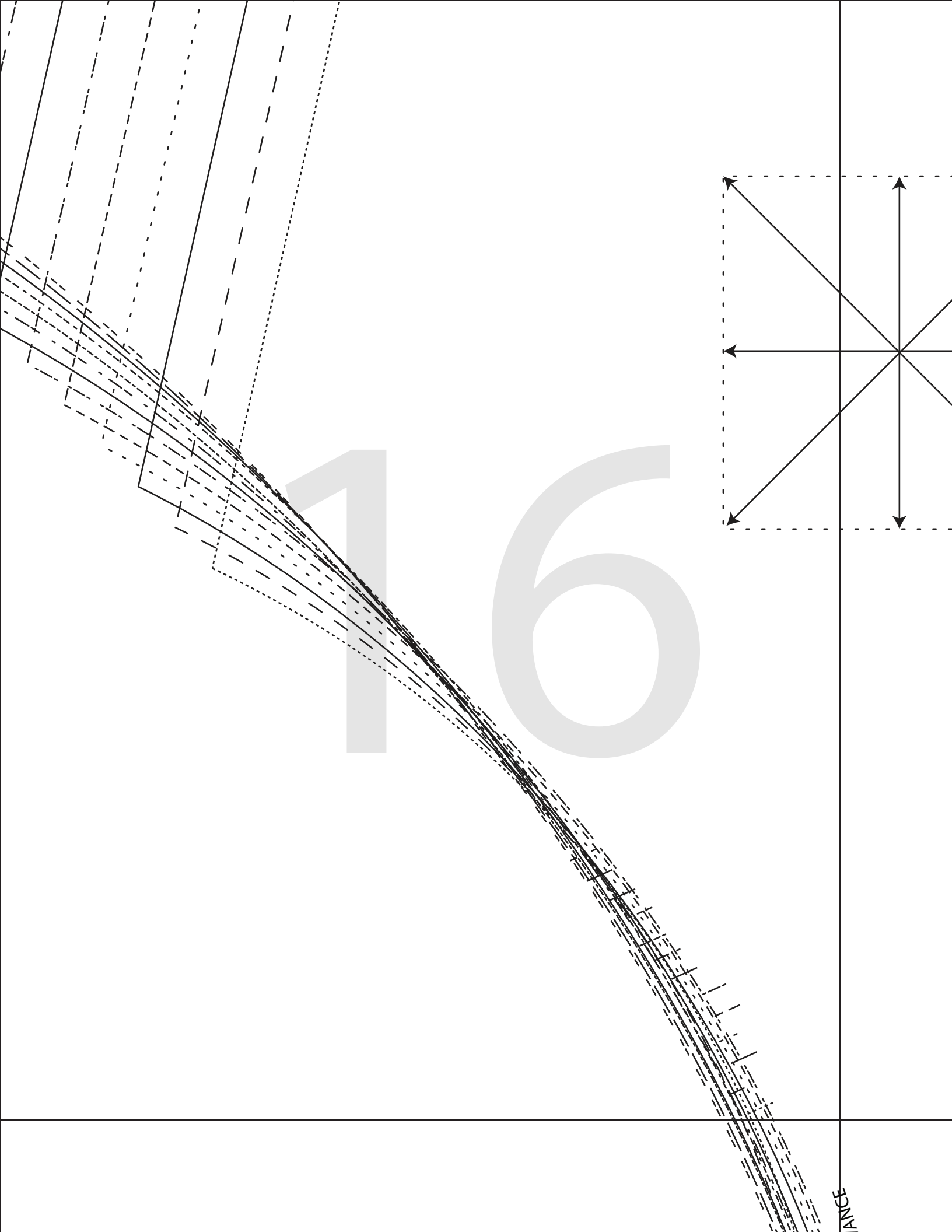
16
DISTANCE

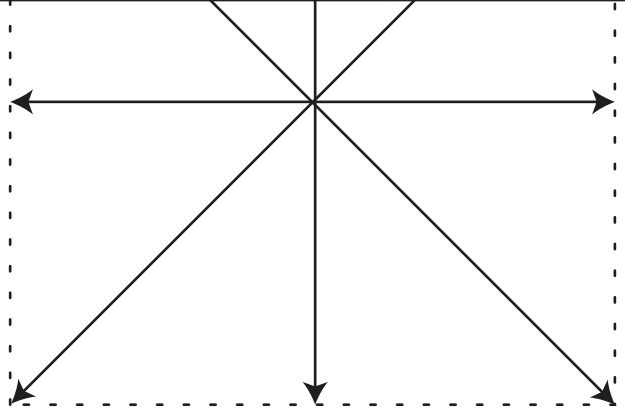

YASMIN WRAP DRESS
#0723

5

BACK FLOUNCE
CUT 1 FOLD
(1.5 cms (5/8“) seam allowance unless otherwise stated)

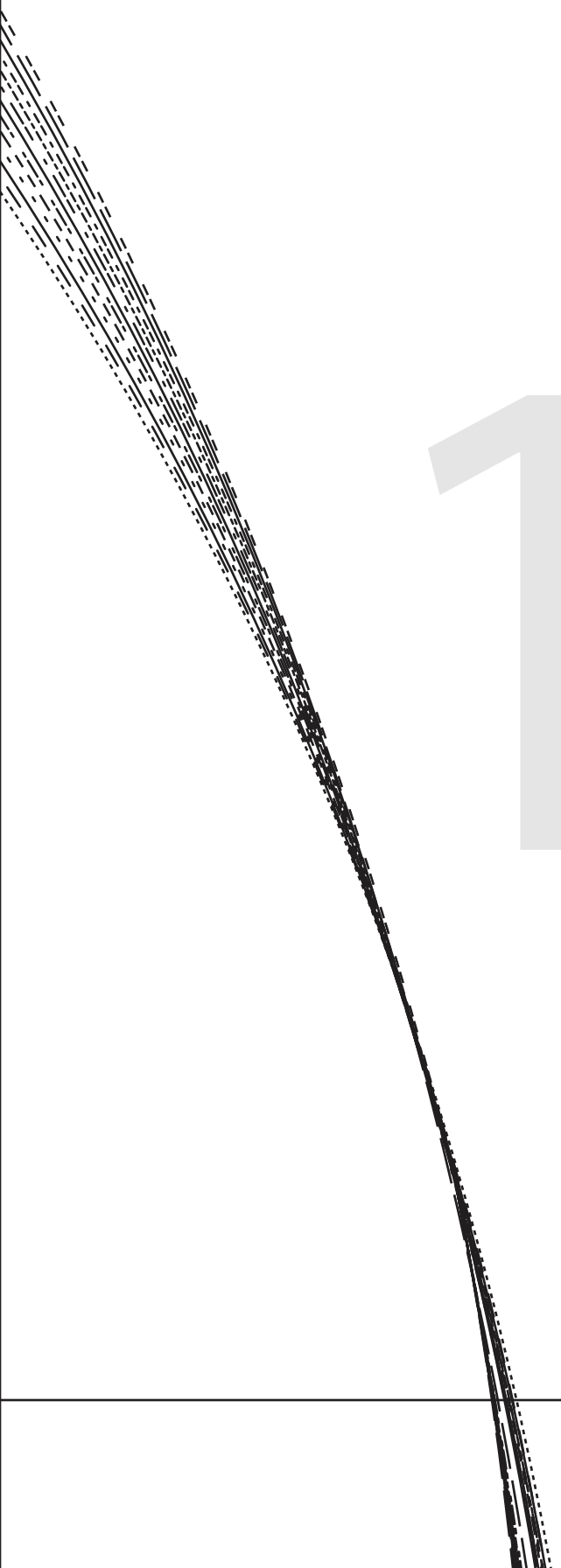

18

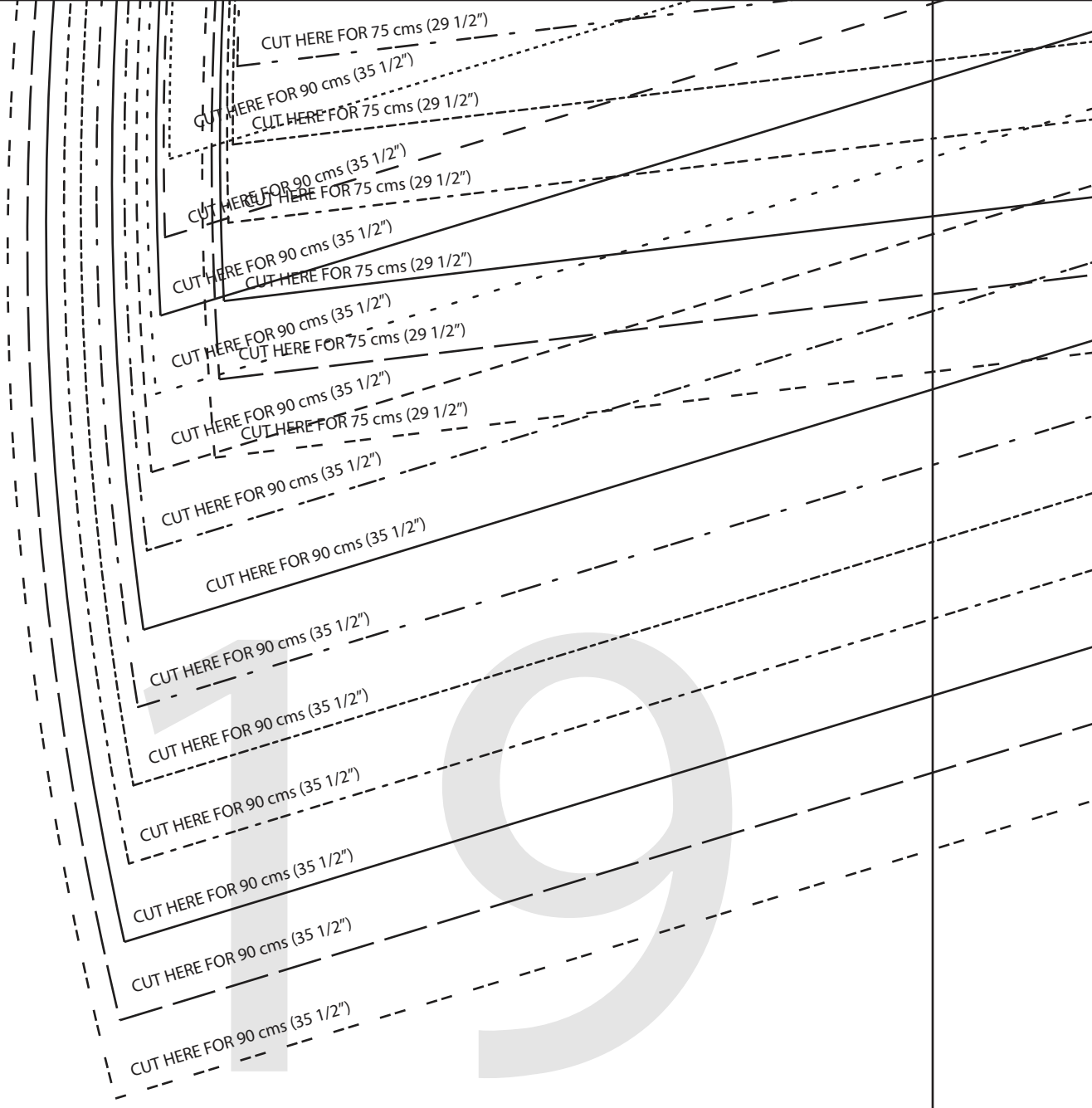
CUT HERE FOR 75 cms (29 1/2")
CUT HERE FOR 90 cms (35 1/2")
CUT HERE FOR 75 cms (29 1/2")
CUT HERE FOR 90 cms (35 1/2")
CUT HERE FOR 75 cms (29 1/2")
CUT HERE FOR 90 cms (35 1/2")
CUT HERE FOR 75 cms (29 1/2")
CUT HERE FOR 90 cms (35 1/2")
CUT HERE FOR 75 cms (29 1/2")
CUT HERE FOR 90 cms (35 1/2")
CUT HERE FOR 90 cms (35 1/2")
CUT HERE FOR 90 cms (35 1/2")
CUT HERE FOR 90 cms (35 1/2")
CUT HERE FOR 90 cms (35 1/2")
CUT HERE FOR 90 cms (35 1/2")

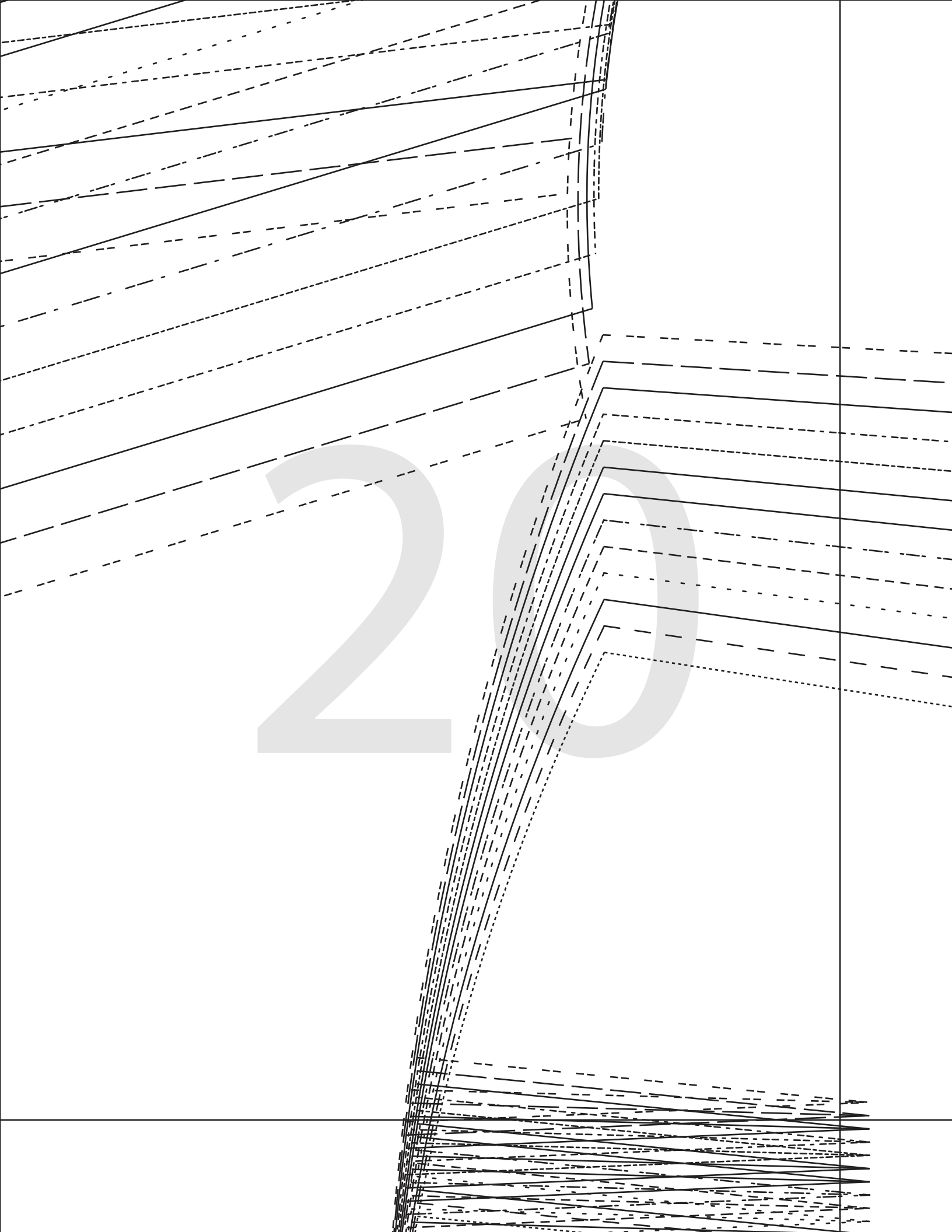

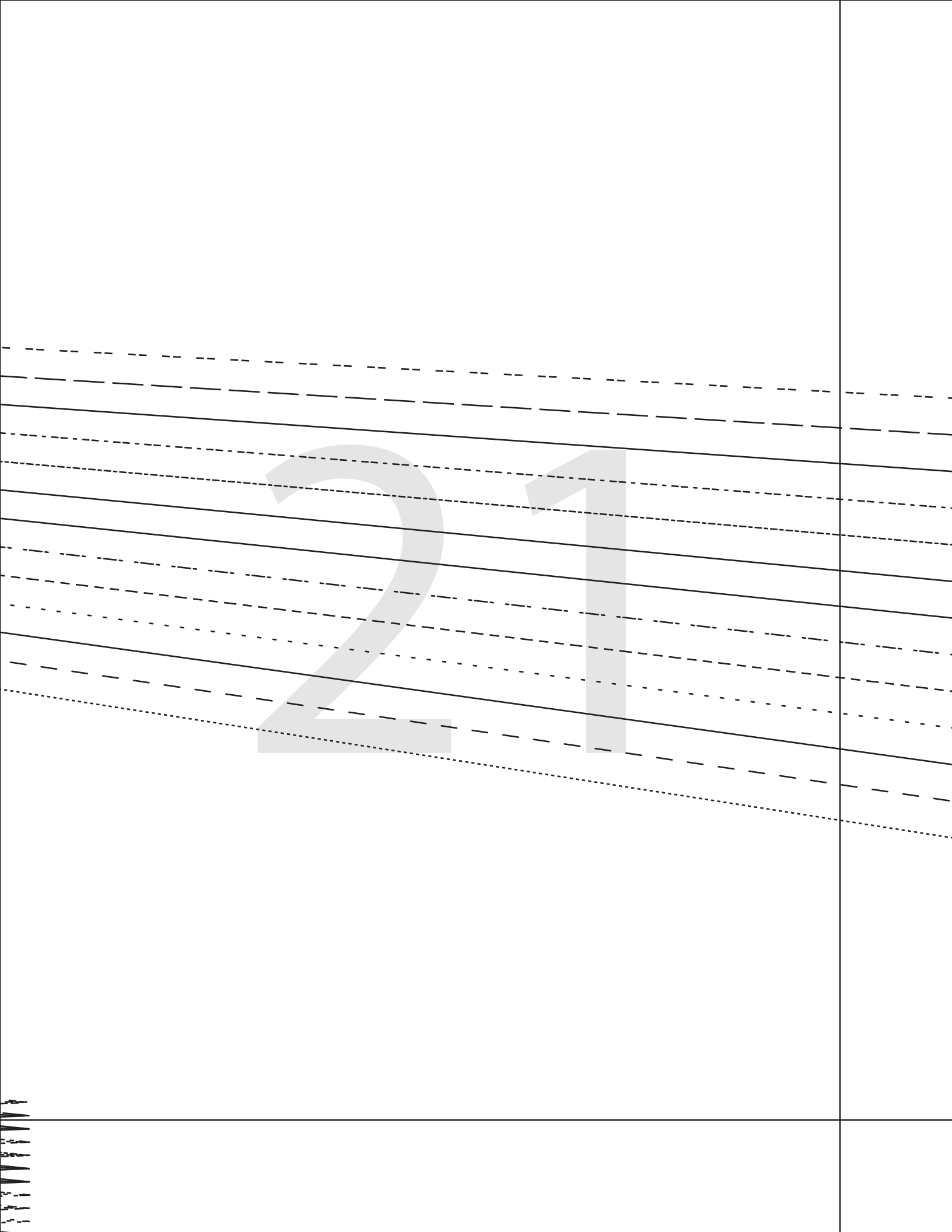

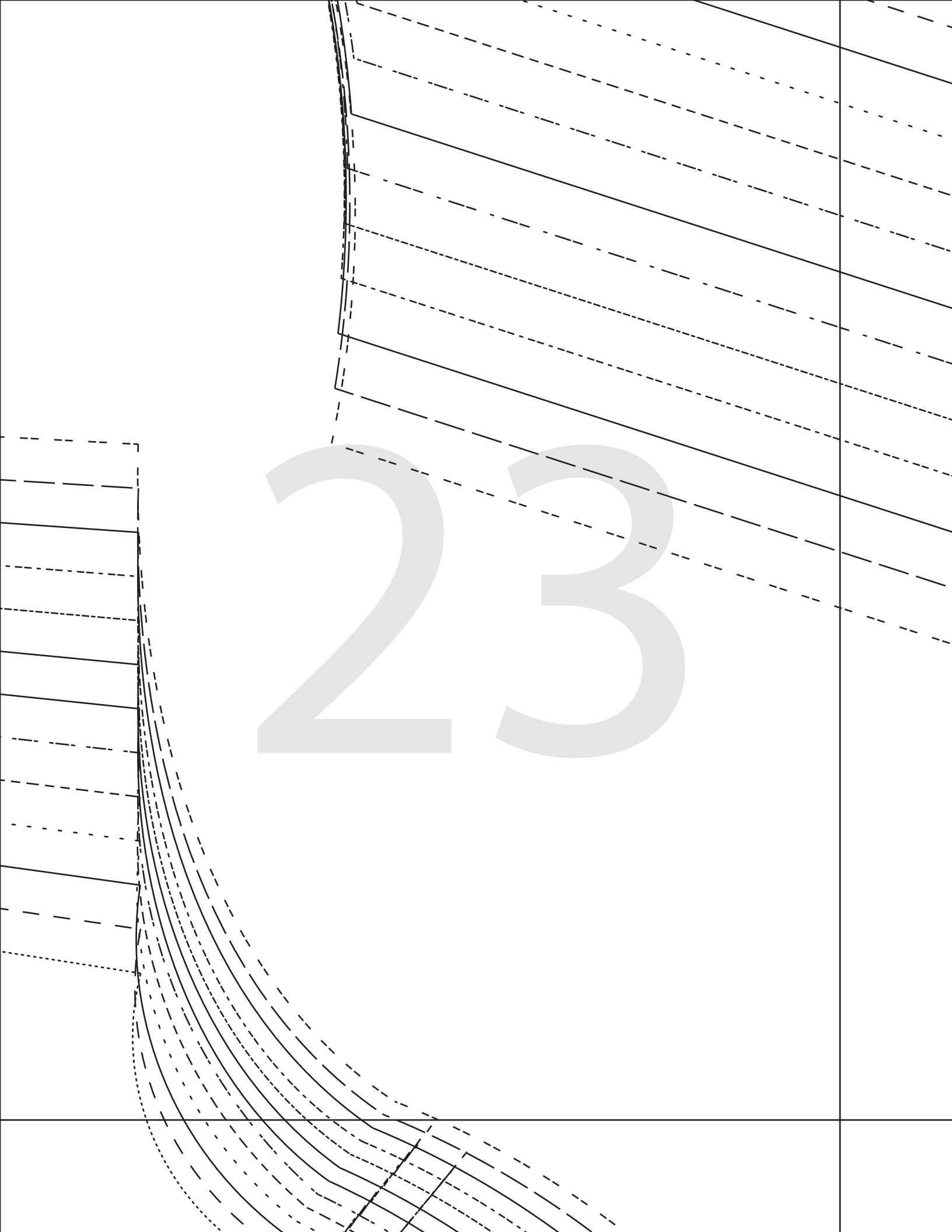
23

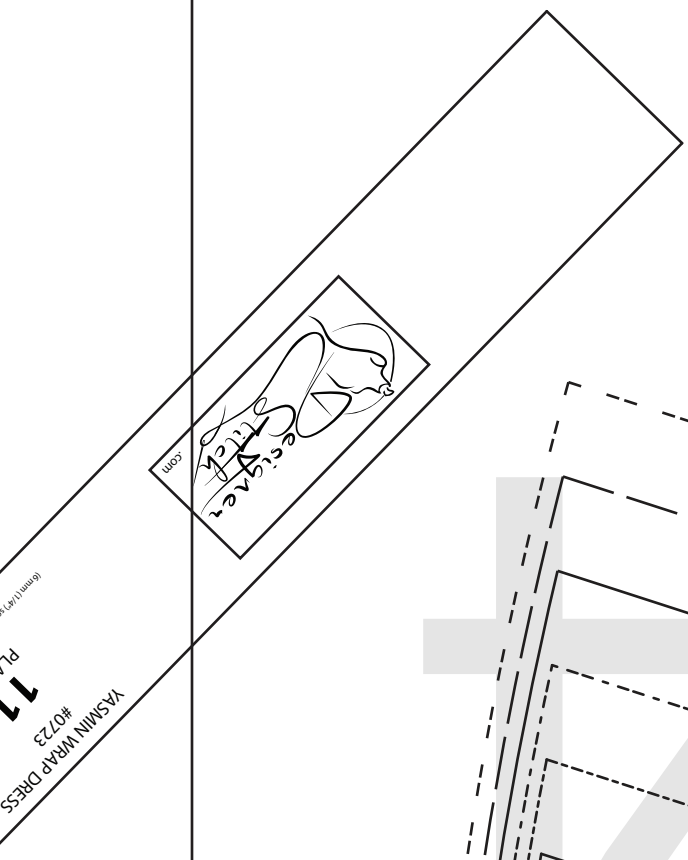

SIDE SEAM

SIDE SEAM

SIDE SEAM

SIDE SEAM

SIDE SEAM

SIDE SEAM

SIDE SEAM

SIDE SEAM

SIDE SEAM

SIDE SEAM

SIDE SEAM

SIDE SEAM

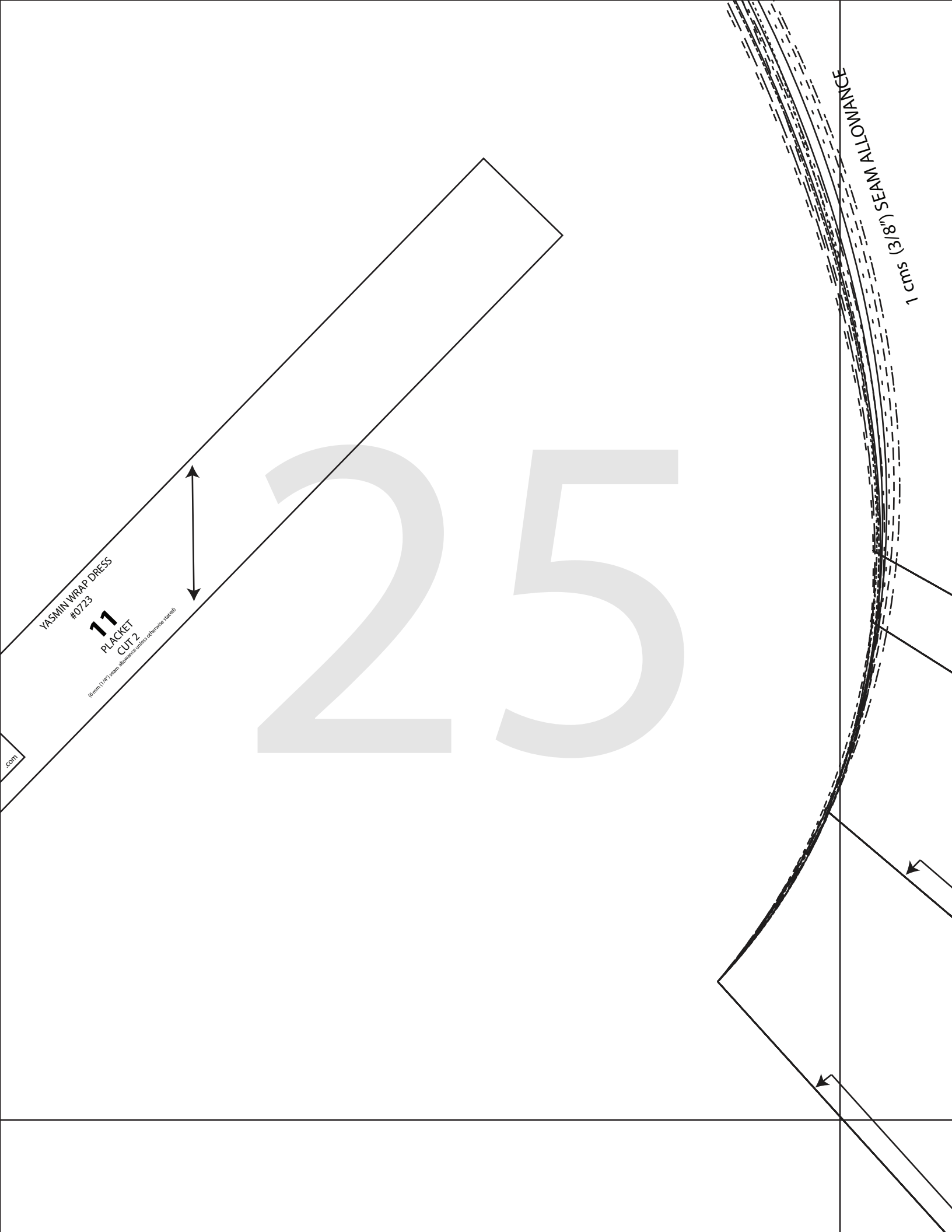
YASMIN WRAP DRESS
#0723
11
PLACKET
CUT 2
(6 mm (1/4") seam allowance unless otherwise stated)
.com
25
1 cms (3/8") SEAM ALLOWANCE

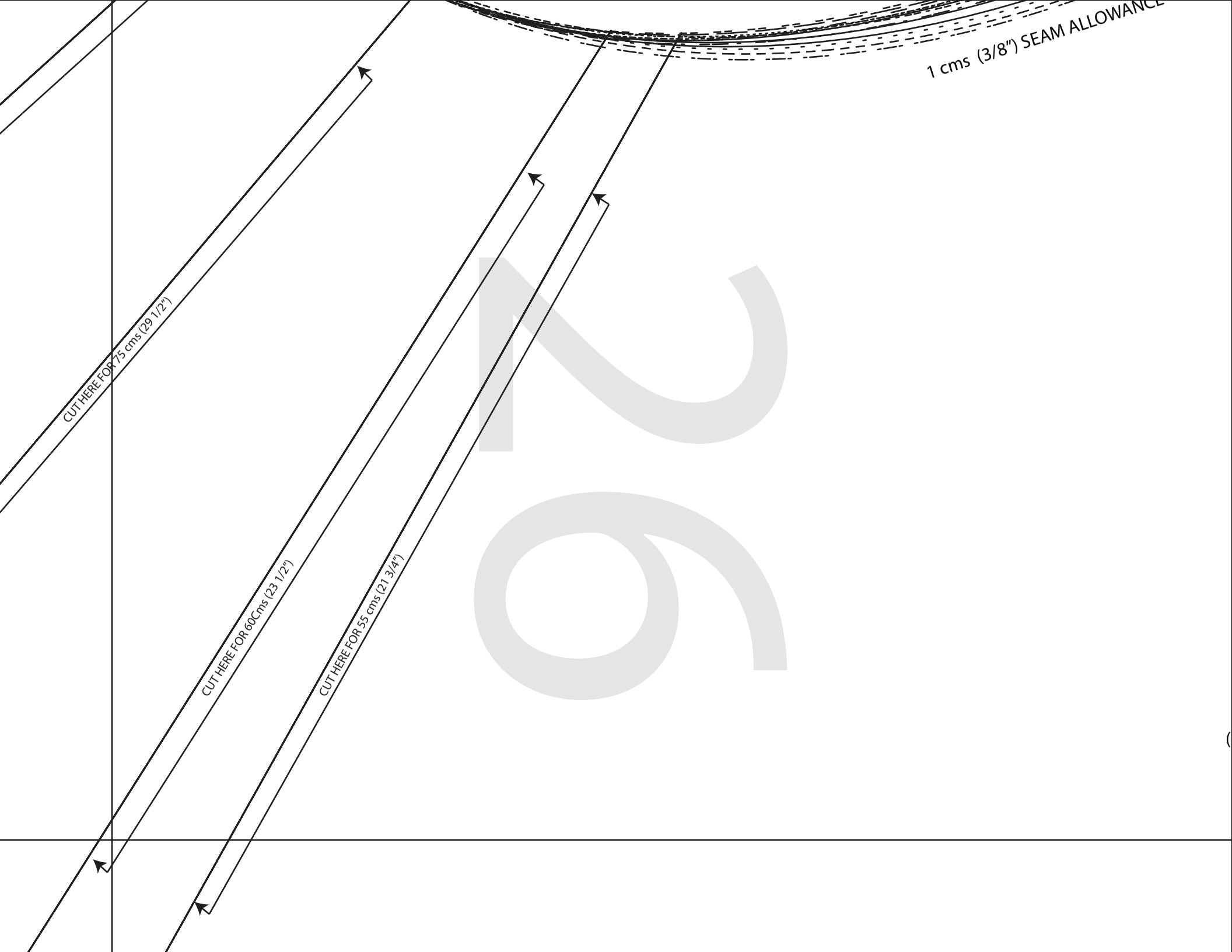
1 cms (3/8") SEAM ALLOWANCE
CUT HERE FOR 75 cms (29 1/2")
CUT HERE FOR 60Cms (23 1/2")
CUT HERE FOR 55 cms (21 3/4")

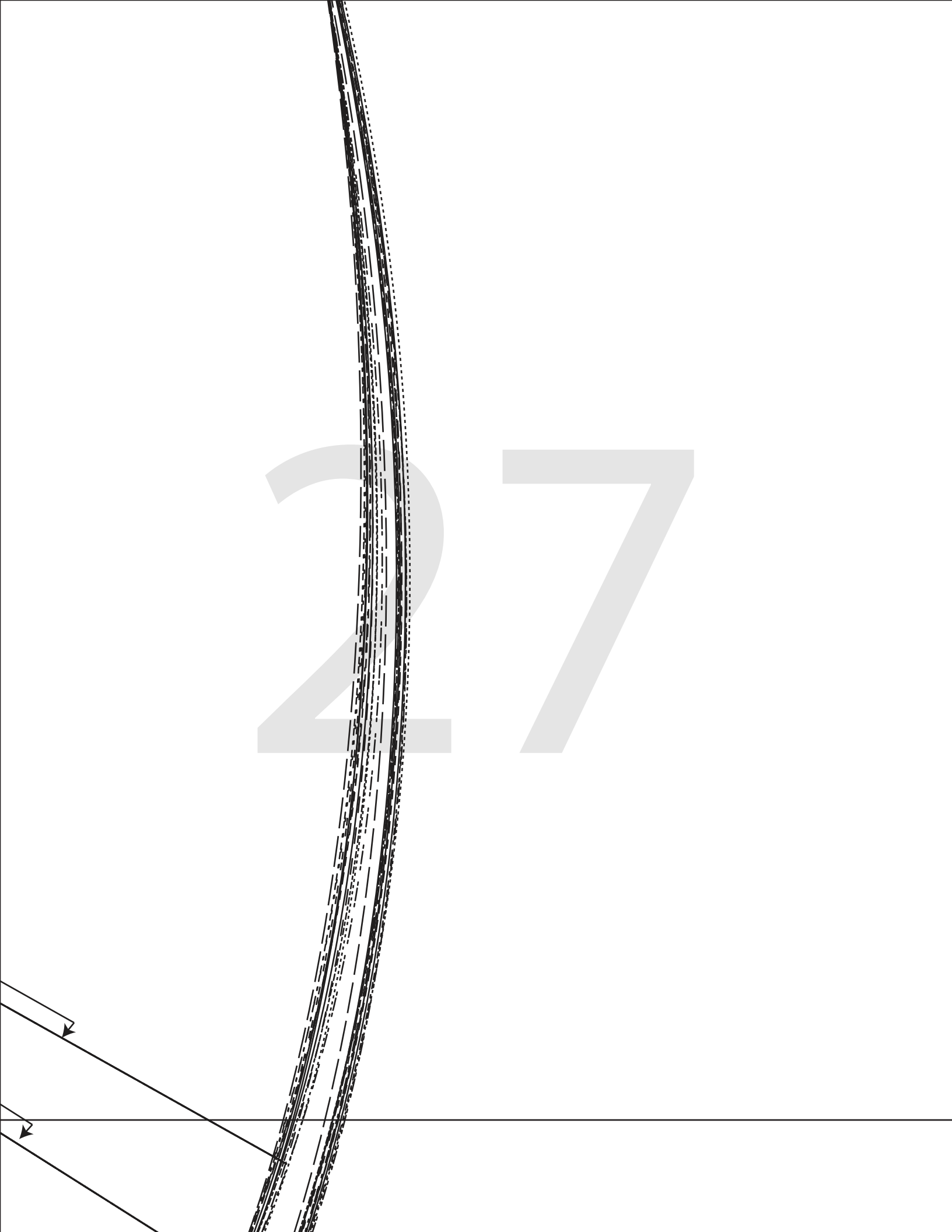

6mm (1/4") SEAM ALLOWANCE

29

YASMIN WRAP DRESS

#0723

9

BISHOP SLEEVE

CUT 2

(1.5 cms (5/8“) seam allowance unless otherwise stated)

1cms (3/8") SEAM ALLOWANCE

1cms (3/8") SEAM ALLOWANCE

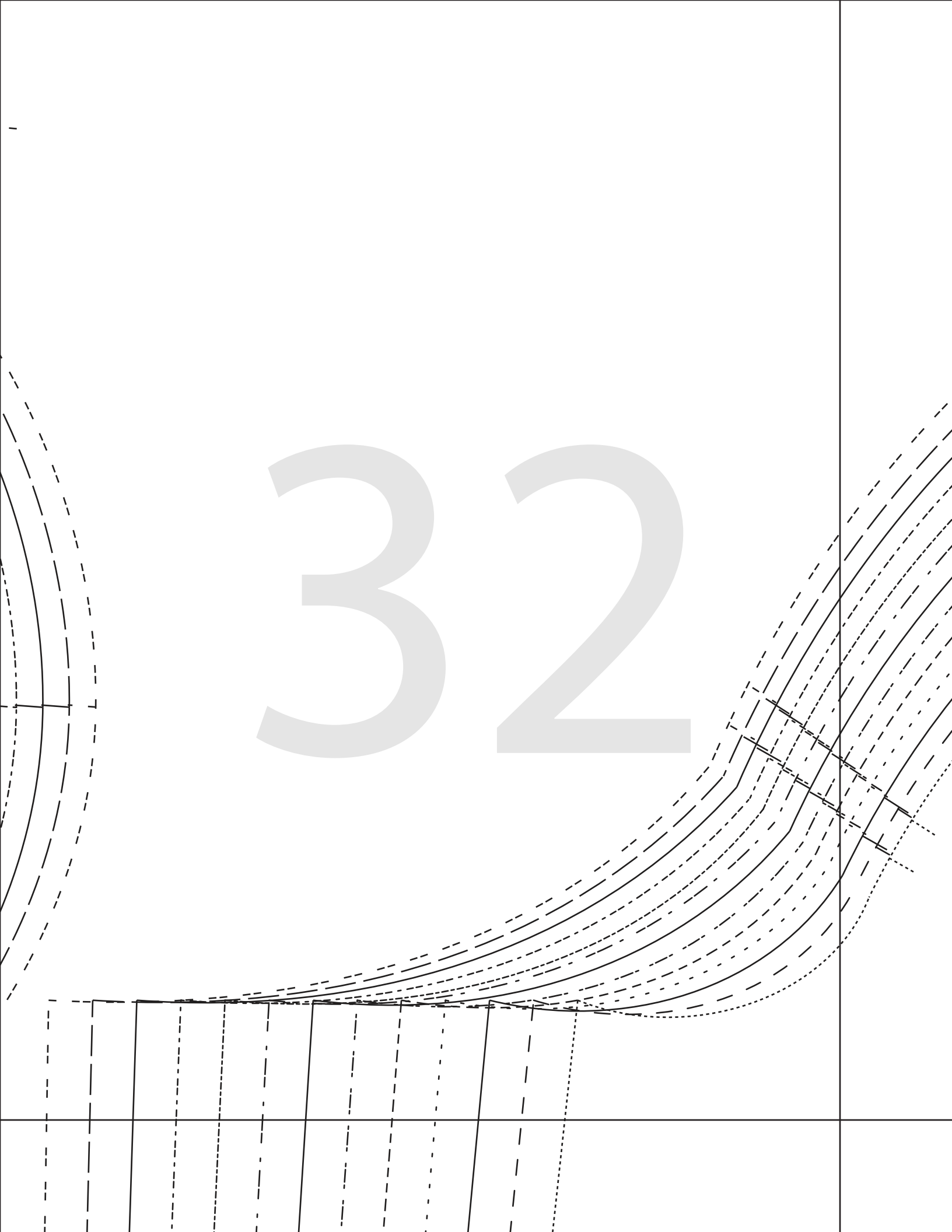

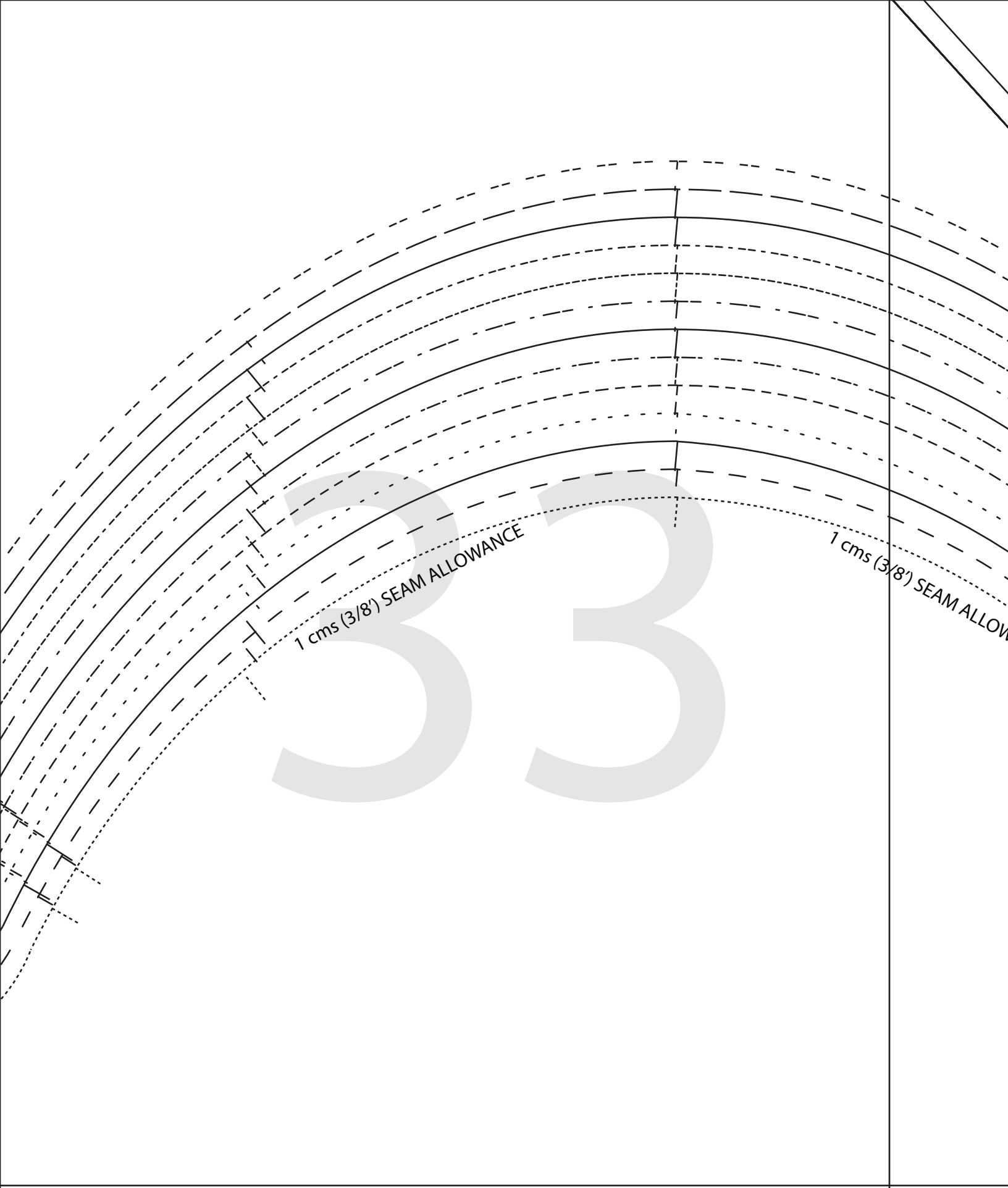
1 cms (3/8') SEAM ALLOWANCE
1 cms (3/8') SEAM ALLOW

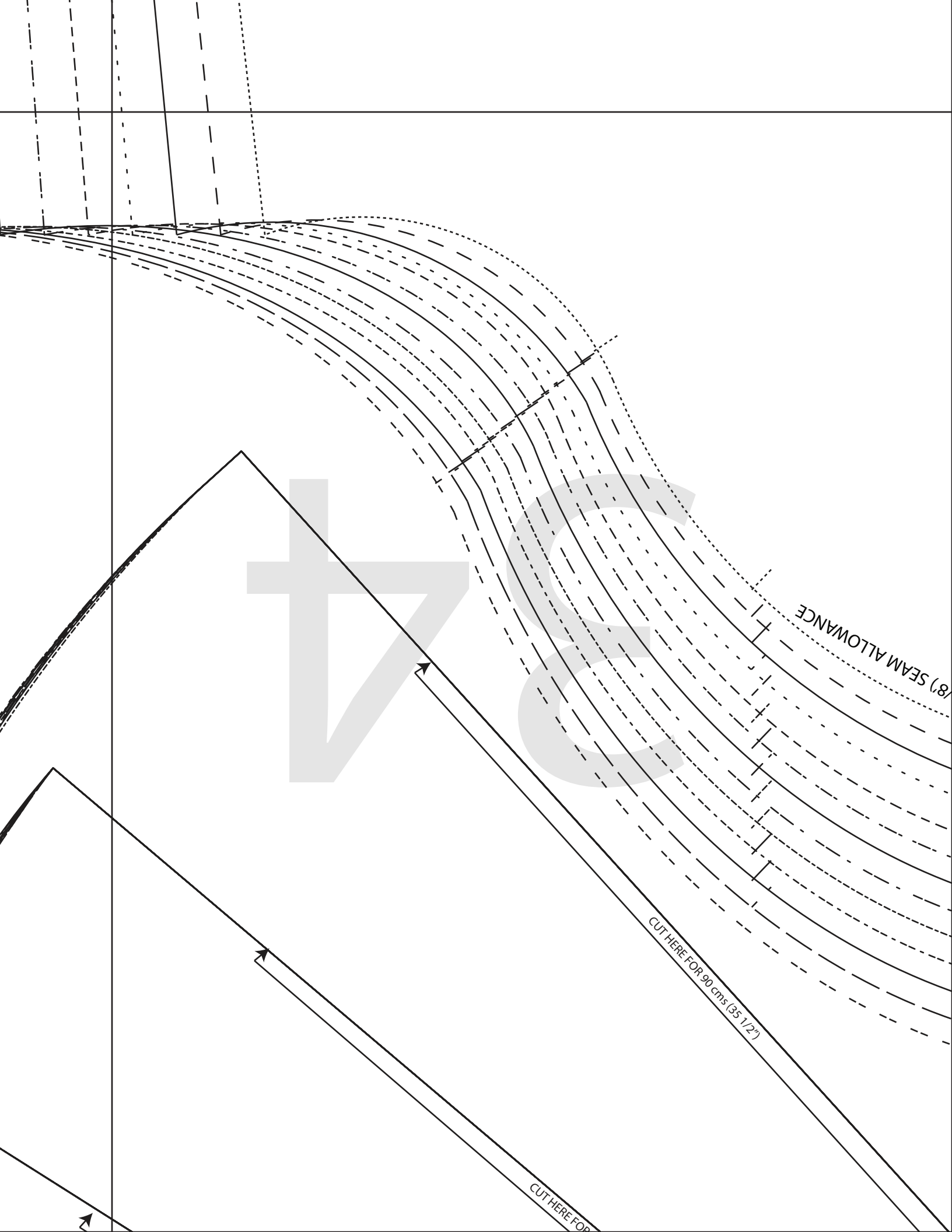
SEAM ALLOWANCE (8")
CUT HERE FOR 90 cms (35 1/2")
CUT HERE FOR

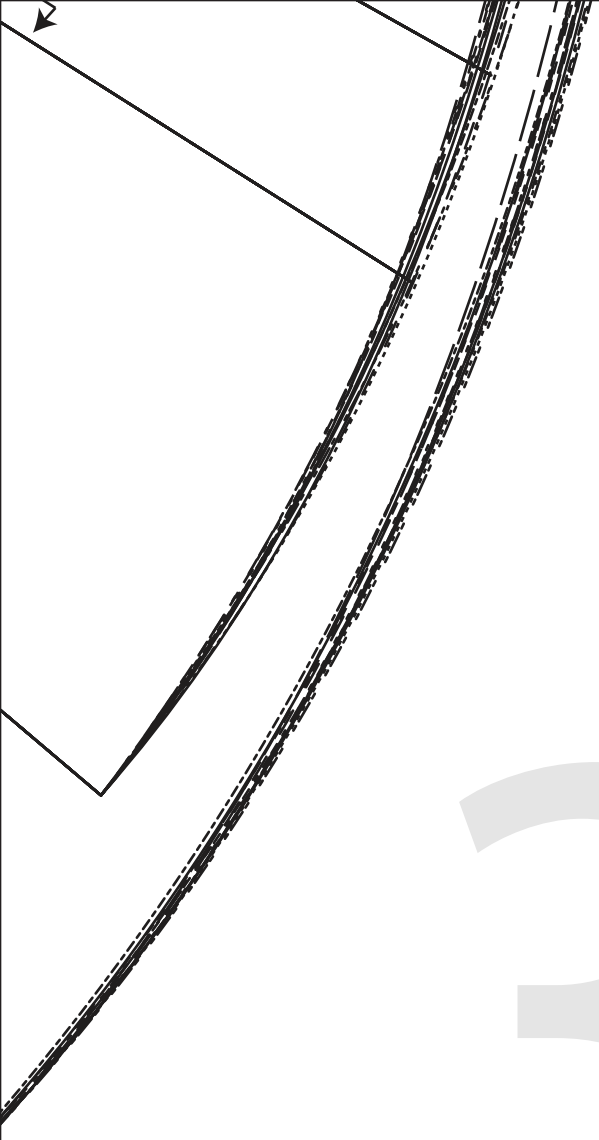

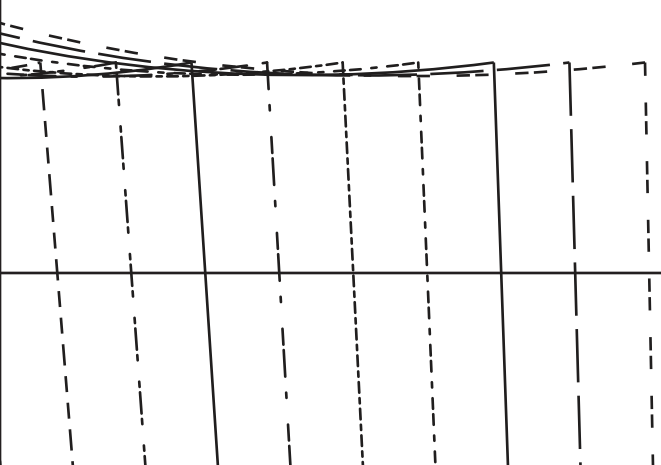

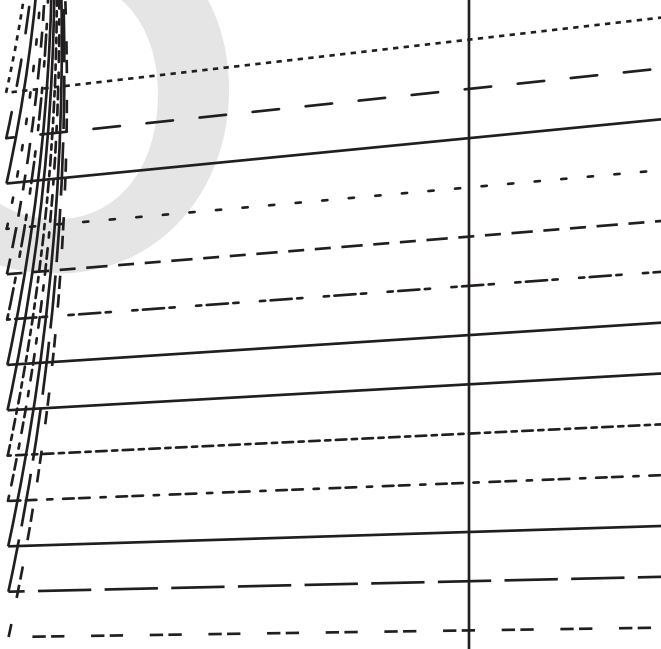

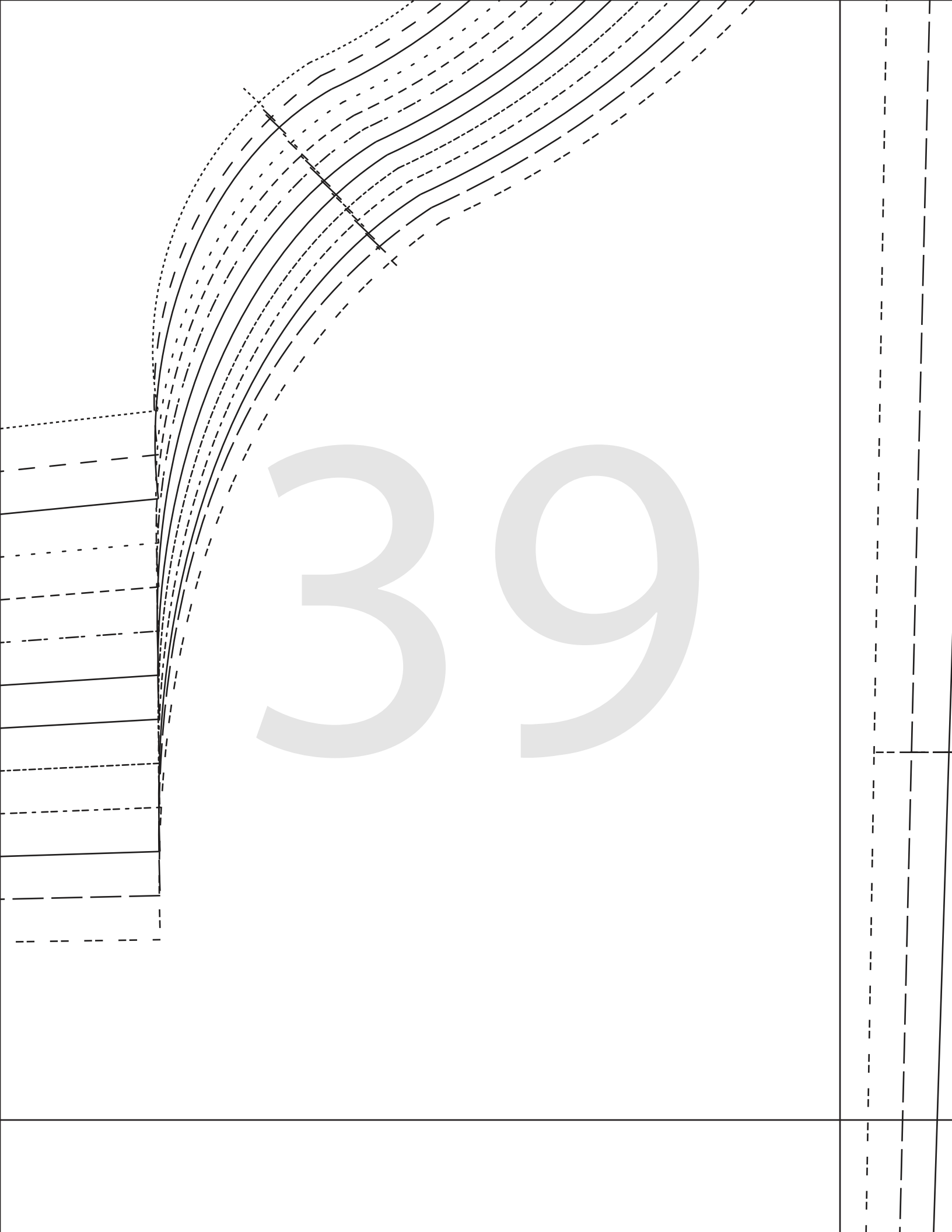
39

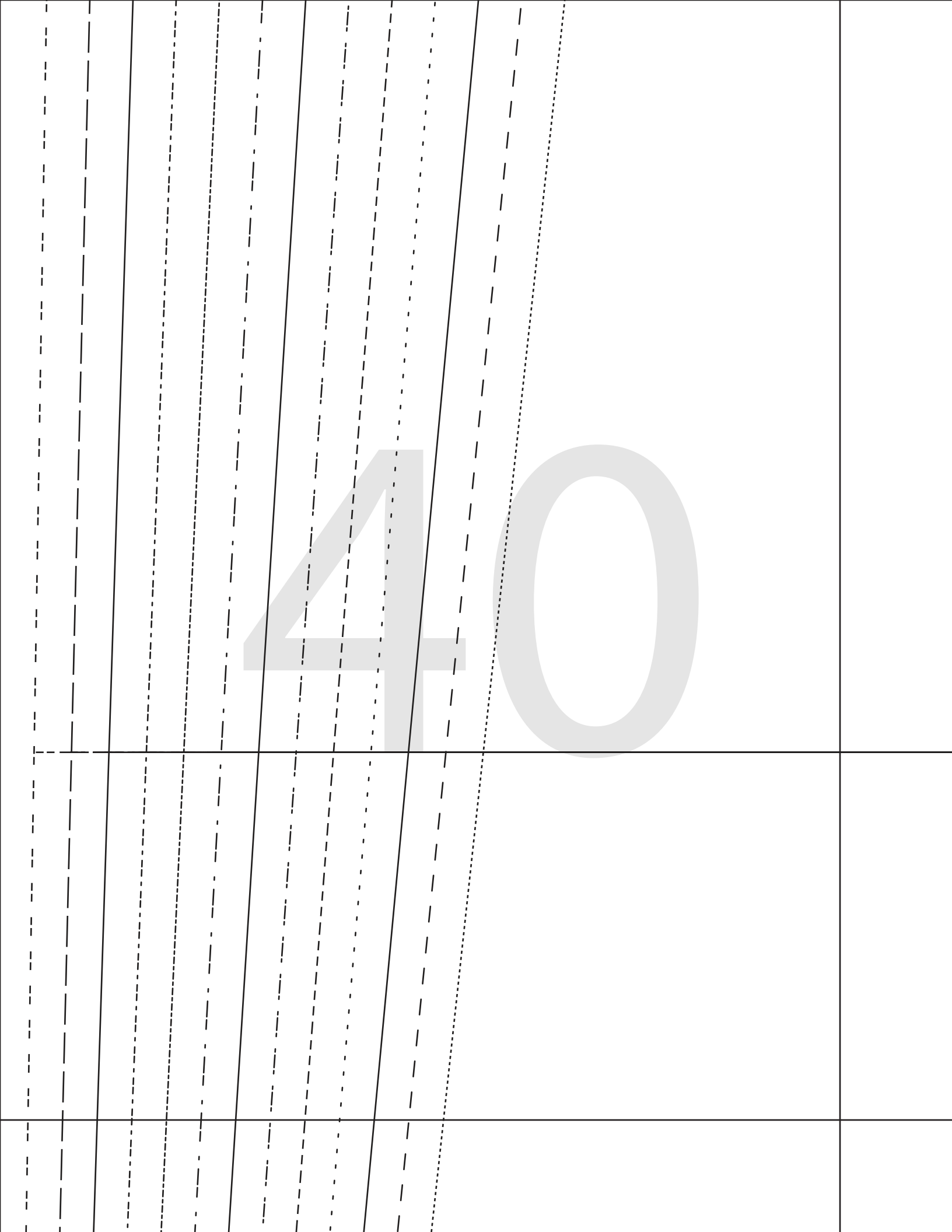
40

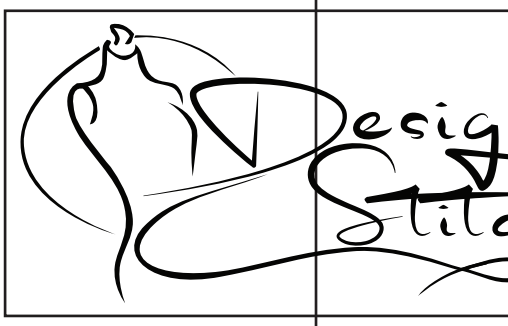

YASMIN WRAP D
#0723

41

12

SHIRRED SLEE
CUT 2
(1.5 cms (5/8") seam allowance unless

CUT HERE ABOVE ELBOW SLEEVE 2 cms (

WRAP DRESS
0723

12

ED SLEEVE
CUT 2
owance unless otherwise stated)

EEVE 2 cms (3/4") SEAM ALLOWANCE

42

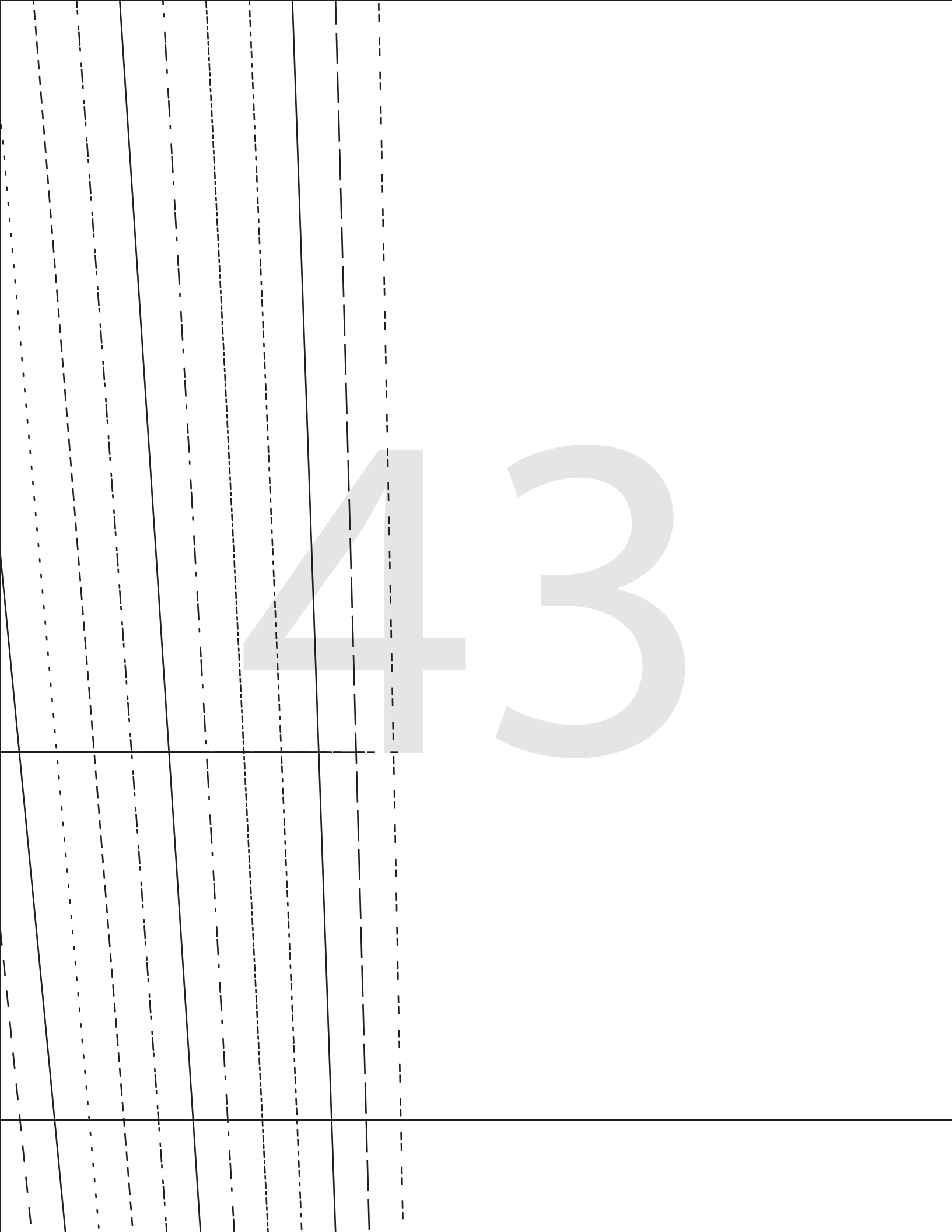
43

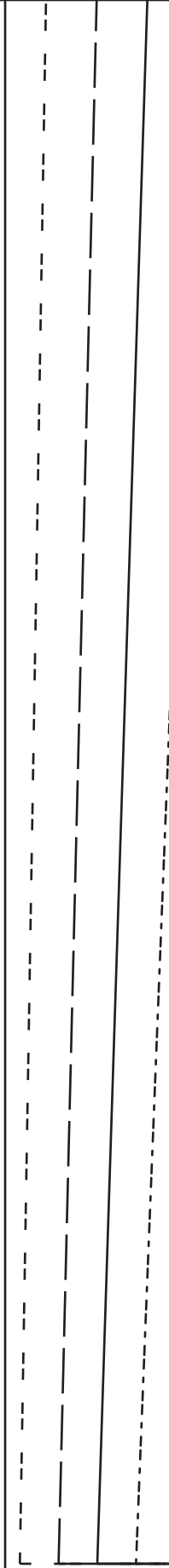

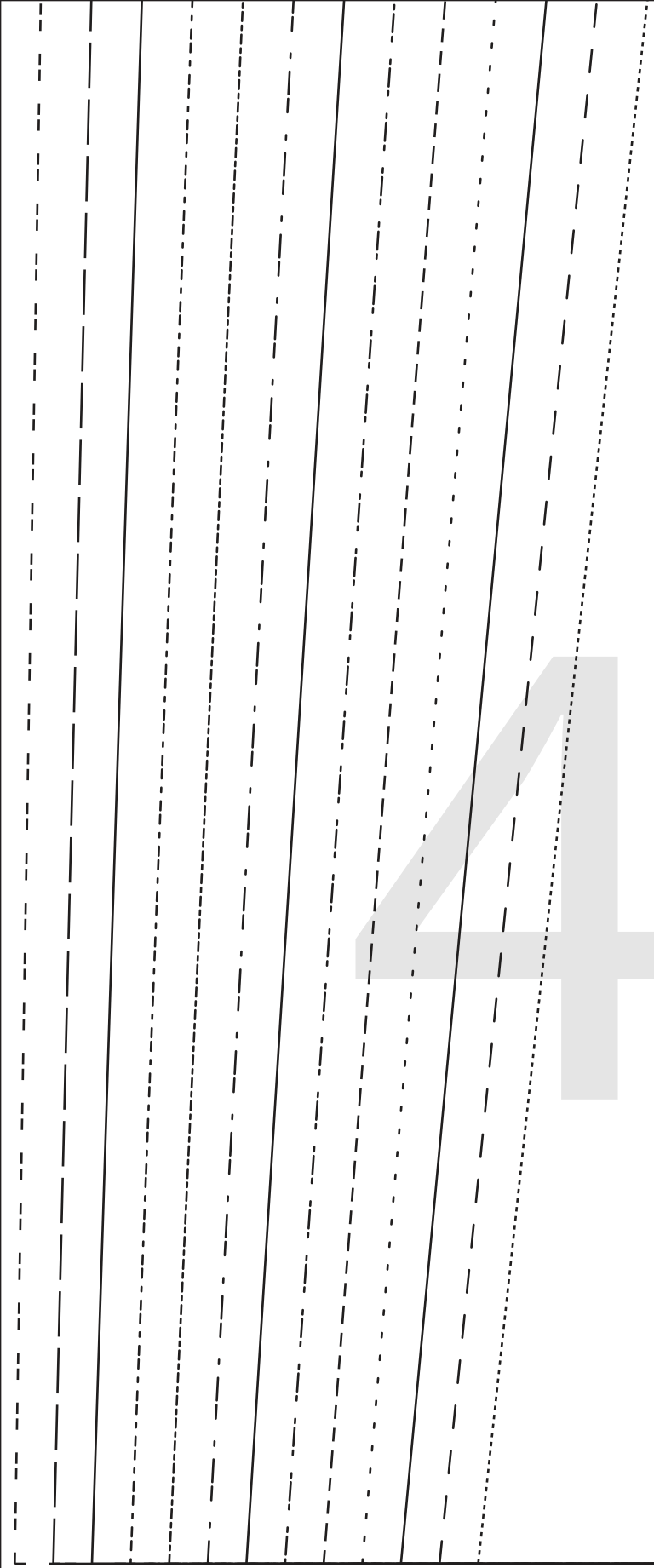

CUT HERE LONG SLEEVE

2 cms (3/

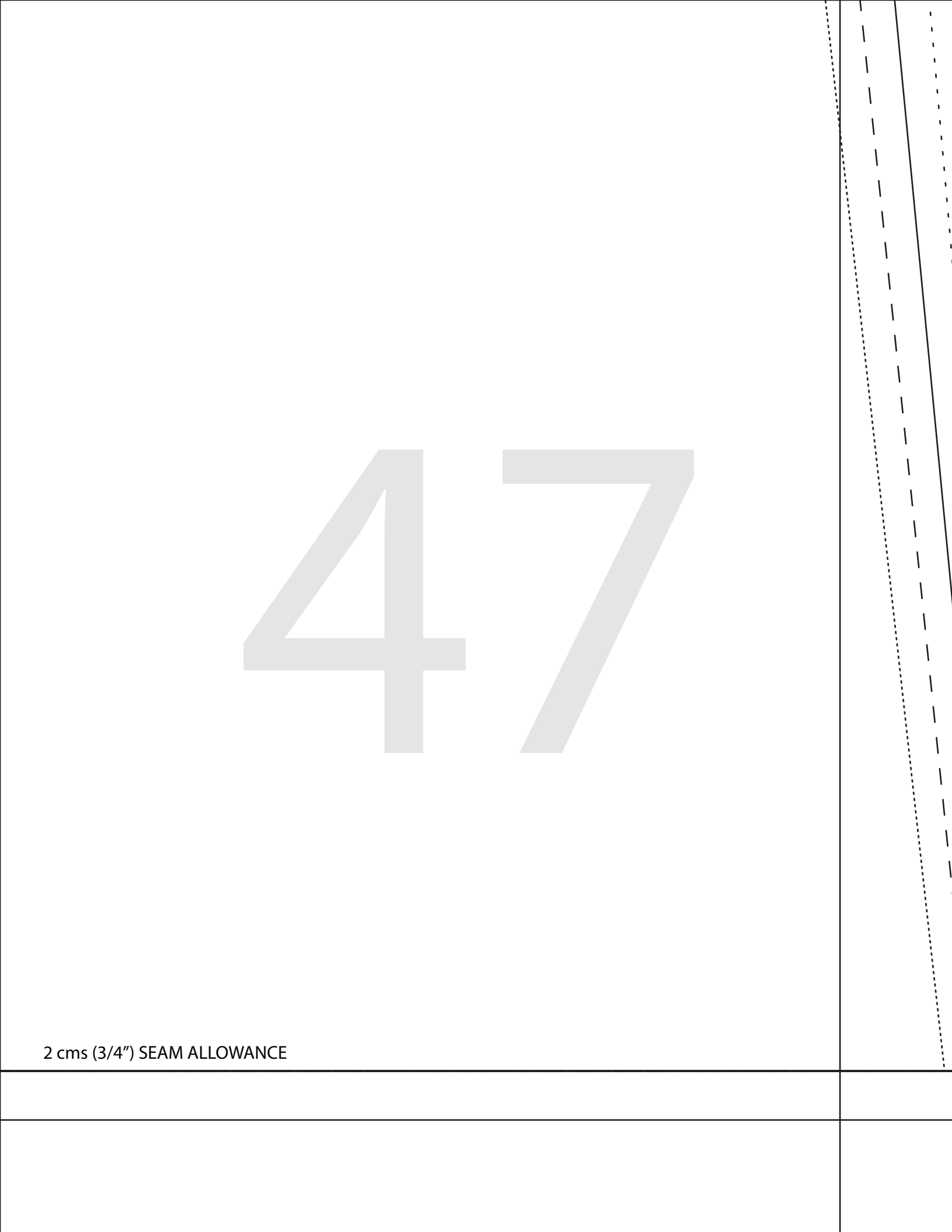
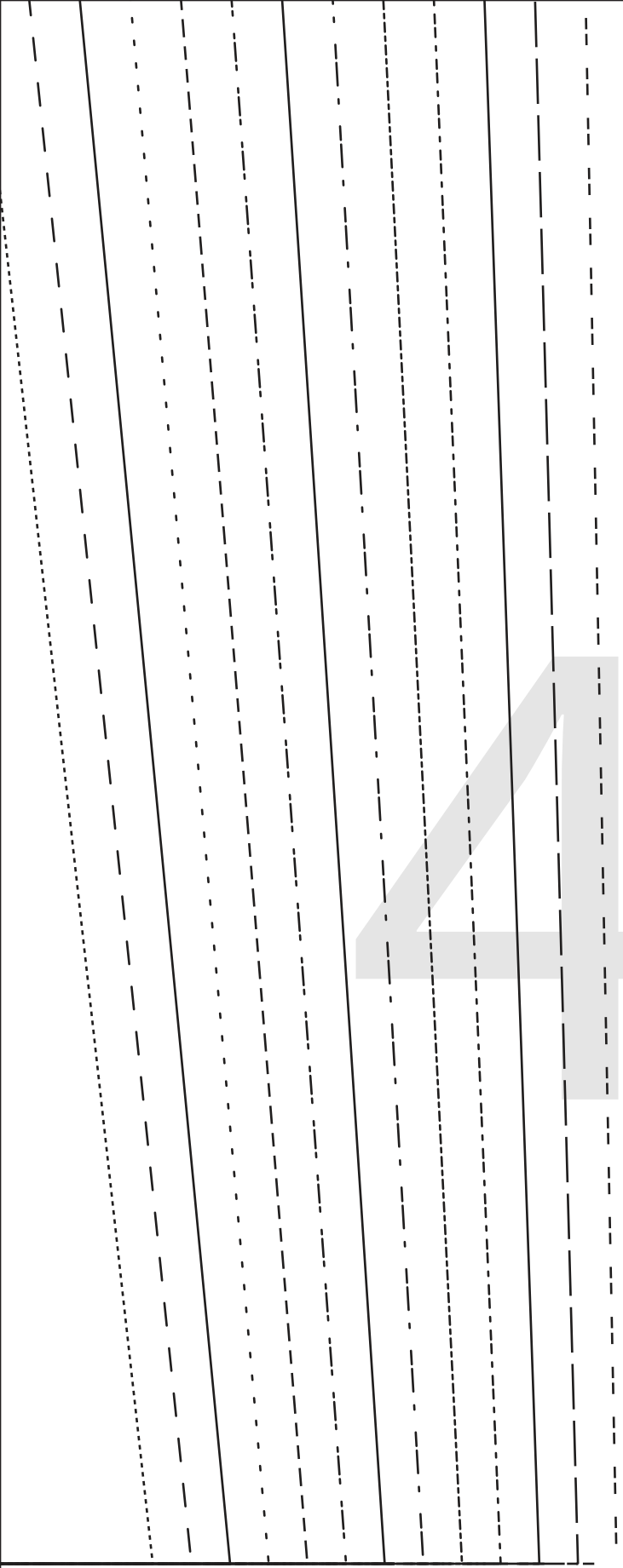
2 cms (3/4") SEAM ALLOWANCE